TM 11-6625-351-35

DEPARTMENT OF THE ARMY TECHNICAL MANUAL

EMFO LIBRARY

FIELD AND DEPOT MAINTENANCE MANUAL

RADIO INTERFERENCE MEASURING SET AN/URM-85

HEADQUARTERS, DEPARTMENT OF THE ARMY
15 MARCH 1962

WARNING

DANGEROUS VOLTAGES EXIST IN THIS EQUIPMENT

Be careful not to contact high-voltage connections or 120/240-volt input connections when working on or near this equipment. Serious electrical shock or death may result from contact with these terminals.

DON'T TAKE CHANCES

RADIATION HAZARD

Tube types OA2WA and OB2WA contain a small amount of radioactive material. These tubes are potentially hazardous when broken. Contact qualified medical personnel immediately in case of an accidental cut from a broken OA2WA or OB2WA type tube. For further instructions, refer to TB SIG 225.

310-4

Change now in force: C2

TM 11-6625-351-35
***C2**

CHANGE
No. 1

HEADQUARTERS
DEPARTMENT OF THE ARMY
Washington D.C., *10 October 1967*

mb 11-22-67

Field and Depot Maintenance Manual
RADIO INTERFERENCE MEASURING SET AN/URM-85

TM 11-6625-351-35, 15 March 1962, is changed as follows:

Page 8. Delete figure 2 (as changed by C 1, 24 Oct. 62) and substitute new figure 2.

*This change supersedes C 1, 24 October 1962.

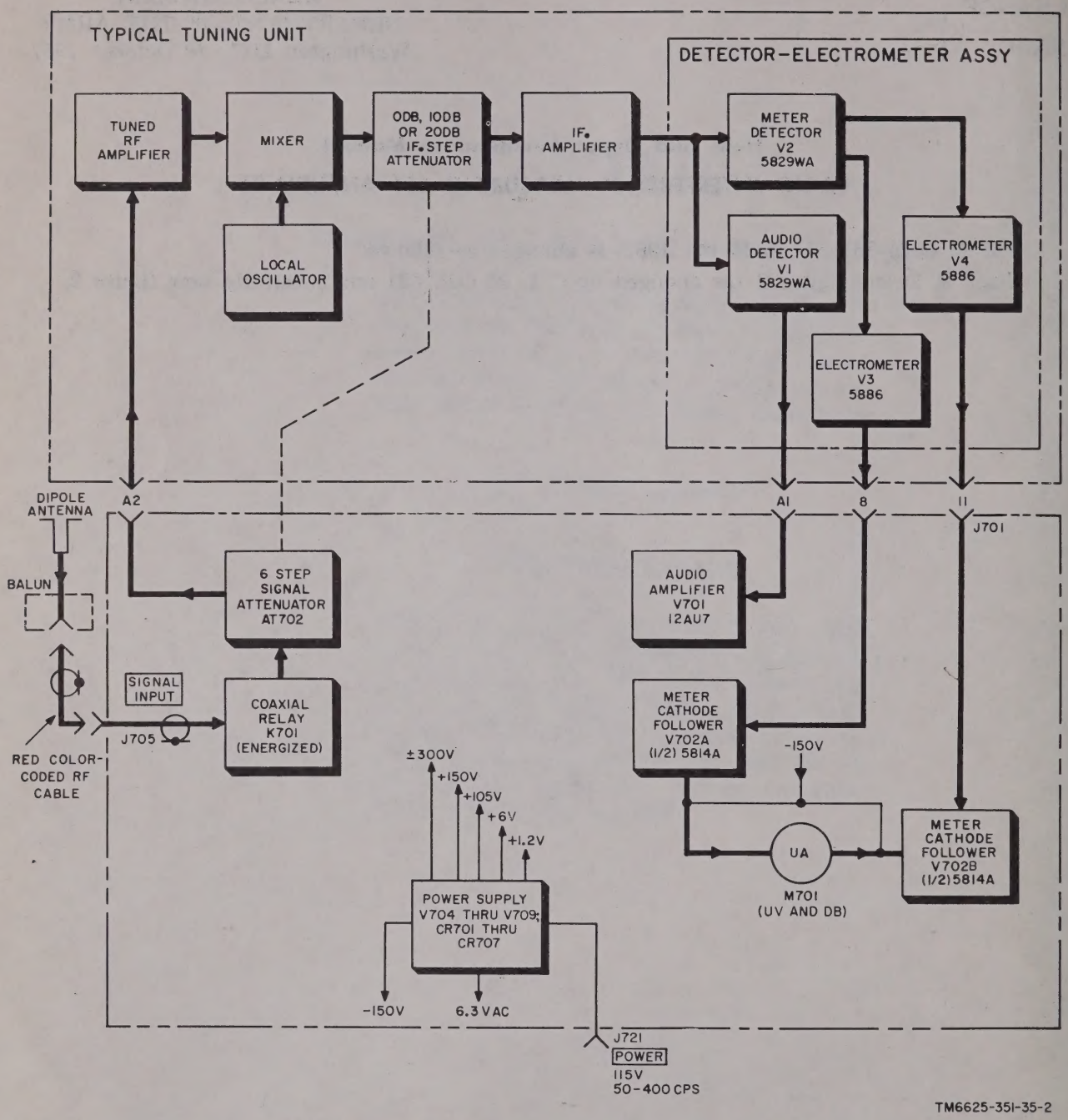

Figure 2. Shunt method of calibration, using incoming RF signal.

Page 38, figure 16 (upper left) (as changed by C 1, 24 Oct. 62). Make the following changes:

Change the value of capacitor C6 to: 540 $\frac{\mu\mu f.}{Mu}$

Remove resistor R2 from the primary winding of transformer T2 and place it across the secondary winding (terminals 11 and 12). Change the value of resistor R2 to: 1 megohm.

Page 124, figure 58 (as changed by C 1, 24 Oct. 62). Add the following note under Z1.

NOTE:
THE POSITION OF RESISTOR R2 HAS BEEN CHANGED SO THAT IT IS CONNECTED ACROSS THE SECONDARY WINDING OF TRANSFORMER T2 (TERMINALS 11 AND 12).

Page 227. After chapter 4, add chapter 5.

CHAPTER 5

DEPOT OVERHAUL STANDARDS

114. Applicability of Depot Overhaul Standards

The tests outlined in this chapter are designed to measure the performance capability of a repaired electronic equipment. Equipment that is to be returned to stock should meet the standards given in these tests.

115. Applicable References

a. Repair Standards. Applicable procedures of the depots performing these tests and the general standards for repaired electronic equipment given in TB SIG 355-1, TB SIG 355-2, and TB SIG 355-3 form a part of the requirements for testing this equipment.

b. Technical Publications. The only other technical publication applicable to the equipments to be tested is TM 11–6625–251–12.

c. Modification Work Orders. Perform all modification work orders applicable to this equipment before making the tests specified. DA Pam 310-7 lists all available MWO's.

116. Test Facilities Required

The following items are needed for depot testing:

a. Test Equipment.

Item	Technical Manual	Common Name
Generator, Signal AN/URM-127	TM 11-6625-683-15	Signal generator.
Generator, Pulse SG-128/U		Pulse generator.
Multimeter TS-352B/U	TM 11-6625-366-15	Multimeter.
Generator, Signal AN/URM-25F	TM 11-5551-E	
Generator, Signal AN/URM-49	TM 11-6625-280-15	
Generator, Signal AN/USM-44	TM 11-6625-508-10	
Voltmeter, Electronic ME-30C/U	TM 11-6625-320-12	Voltmeter, electronic.

b. Additional Equipment.

Equipment	Quantity Req'd.	Application
1. Empire Devices Inc. Model AT-103-C step attenuator (variable in 5-db steps from 0 to 25 db).	1	Used in linearity test (para. 120), as a means of attenuating the input test signal to the test set, in 5-db steps.
2. Empire Devices Inc. Model AT-50-10 coaxial attenuator.	1	Used as an isolation pad for the signal generator.
3. Empire Devices Inc. Model AT-50-20 coaxial attenuator.	1	Used as an isolation pad for the signal generator.
4. Empire Devices Inc. Model AT-106H microwave attenuator panel.	1	Used in the two-terminal RF voltmeter calibration test as a means of attenuating the input test signal to the test set in 20-db steps.
5. Empire Devices Inc. Model SU-105 switching unit.	5	Used in the two-terminal RF voltmeter calibration test as a means of switching from the power meter to the test set in use.
6. Hewlett-Packard Model 431B power meter.	1	Used to monitor power for calibration as a two-terminal RF voltmeter (fig. 95.4).
7. Hewlett-Packard Model 478A thermistor mount.	1	Used to monitor power for calibration as a two-terminal RF voltmeter (fig. 95.4).

117. General Requirements

The following tests shall be performed. Input power shall be 115 volts, 60 cps, single phase. The results shall be as specified in each test.

118. Dial Calibration Accuracy Test

a. With a tuning unit plugged into the main unit compartment, connect a cable from the rf output jack on the appropriate signal generator, for the frequency under test, to the SIGNAL INPUT jack on the AN/URM-85 main unit (fig. 95.1). Set the variable attenuator to the 20-db position.

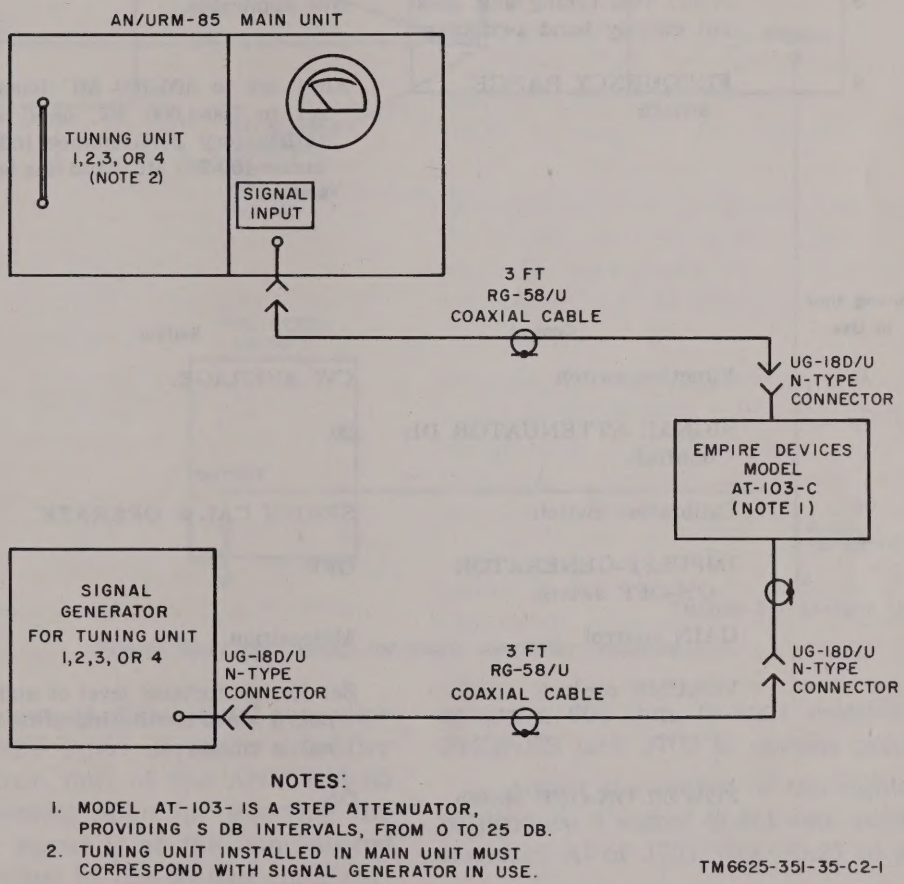

Figure 95.1. Test setup for dial calibration accuracy and linearity test.

b. Initially, set the front panel controls as described below:

Tuning Unit In Use	Control	Setting
1	MEGACYCLES band switch	First set to 0.15-0.36; then to each of the remaining five bands after a satisfactory performance indication in the previous band has been observed.
2	FREQUENCY-RANGE-MC switch	First set to 20-70 MC band; then set to 70-220 MC band after a satisfactory indication in the 20-70 MC band has been observed.
3	*Note:* This tuning unit does not employ band switching.	Not applicable.
4	FREQUENCY RANGE switch	First set to 400-700 MC band; then set to 700-1,000 MC band after a satisfactory performance indication in the 400-700 MC band has been observed.

Tuning Unit In Use	Control	Setting
1, 2, 3, or 4	Function switch	CW AVERAGE.
	SIGNAL ATTENUATOR DB control	20.
	Calibration switch	SERIES CAL & OPERATE.
	IMPULSE-GENERATOR ON-OFF switch.	OFF.
	GAIN control	Midposition.
	VOLUME control	Set for comfortable level of audio signal, if aural monitoring of input signal is employed.
	POWER ON-OFF switch	ON.

c. Set the function switch to CW AVERAGE.

d. Set the band switch (if applicable) and the TUNING control to the lowest band and tuning dial frequency setting. Tune the signal generator to the same frequency.

e. Adjust the attenuator on the signal generator to obtain an on-scale reading on the panel-mounted meter of the main unit.

f. Adjust the TUNING control on the tuning unit to obtain the maximum reading on the meter. If necessary, adjust the attenuator on the signal generator to keep the reading on-scale.

g. Read the frequency on the tuning unit dial. This reading must be within 2 percent of the known accurately calibrated signal generator frequency.

h. Repeat *d* through *g* above, increasing the signal generator frequency in steps of 10 mc.

i. Repeat *a* through *h* above with a different tuning unit installed in the main unit. Start at the lowest frequency setting, and increase both the signal generator frequency output and the tuning unit frequency dial in 10-mc increments. For each tuning unit, the frequency dial accuracy must be within 2 percent of the signal generator frequency.

119. Audio Amplifier Response Test

To check the response of audio amplifier V701 in the main unit, set up the equipment as shown in figure 95.2, and proceed as follows:

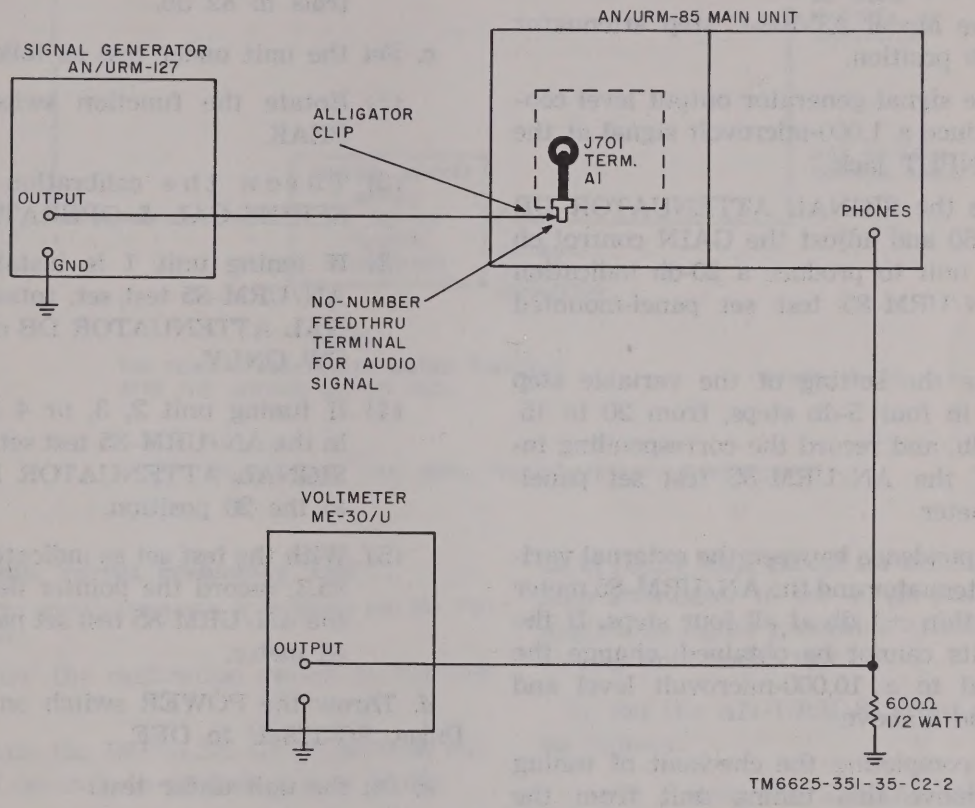

Figure 95.2. Test setup for audio amplifier response test.

a. Connect the output of the signal generator (para. 116) to the input of audio amplifier V701A in the main unit of the AN/URM–85 test set. A convenient point for injecting the signal generator signal is at the unnumbered feedthrough terminal at the bottom right corner of the filter box assembly. The filter box assembly is accessible at the rear of the main unit of the AN/URM–85 test set. This terminal is essentially the same circuit point as terminal A1 of connector J701.

b. Connect Voltmeter, Electronic ME-30C/U across a 600-ohm, ½-watt resistor tied from PHONES jack J702 to chassis ground.

c. Adjust the output of the signal generator to produce a signal of 0.1-volt amplitude from terminal A1 of J701 (fig. 95.2) to ground.

d. Tune the signal generator to 1,000 cps and record the voltage indication shown on Voltmeter, Electronic ME-30C/U.

e. Repeat *d* above at test frequencies of 150; 500; 2,000; 3,000; 4,000; and 5,000 cps respectively. Note the voltage reading at each test frequency. The audio response curve must be

flat, within 8 db, of the 1,000-cycle value, with a gradual slope-off at each end. There can be no resonant peaks.

120. Linearity Test

To check the linearity of the AN/URM–85 test set, set up the equipment as shown in figure 95.1 and proceed as follows:

a. Set the AN/URM–85 test set function switch to PULSE PEAK.

b. Set the Model AT-103-C step attenuator to its 20-db position.

c. Set the signal generator output level control to produce a 1,000-microvolt signal at the SIGNAL INPUT jack.

d. Rotate the SIGNAL ATTENUATOR DB control to 60 and adjust the GAIN control on the tuning unit to produce a 20-db indication on the AN/URM–85 test set panel-mounted meter.

e. Change the setting of the variable step attenuator in four 5-db steps, from 20 to 15, 10, and 5 db, and record the corresponding indication of the AN/URM–85 test set panel-mounted meter.

f. Correspondence between the external variable step attenuator and the AN/URM–85 meter must be within ±1 db at all four steps. If the proper limits cannot be obtained, change the input signal to a 10,000-microvolt level and repeat *d* and *e* above.

g. After completing the checkout of tuning unit 1, remove this tuning unit from the AN/URM–85 test set. Repeat *a* through *f* above with each remaining tuning unit and applicable signal generator.

121. Interference Measurement Test

To perform this test, set up the equipment as shown in figure 95.3 and proceed as follows:

a. Connect the IMPULSE OUTPUT jack of the pulse generator, through the 20-db pad, to the SIGNAL INPUT jack of the AN/URM–85 under test.

b. Set Generator Pulse, SG-128/U as follows:

(1) Throw the PULSE POLARITY switch to PLUS.

(2) Set Generator Pulse, SG-128/U COARSE and FINE output level controls to a value 20 db greater than the settings shown on calibration charts 4A and 4B, supplied with the unit under test. This chart is supplied with each AN/URM–85 test set. For instance, if the calibration chart shows a value of 62 db, set Generator Pulse, SG–128/U COARSE and FINE controls to 82 db.

c. Set the unit under test as follows:

(1) Rotate the function switch to CW PEAK.

(2) Throw the calibration switch to SERIES CAL & OPERATE.

(3) If tuning unit 1 is installed in the AN/URM–85 test set, rotate the SIGNAL ATTENUATOR DB control to 0 CW ONLY.

(4) If tuning unit 2, 3, or 4 is installed in the AN/URM–85 test set, rotate the SIGNAL ATTENUATOR DB control to the 20 position.

(5) With the test set as indicated in figure 95.3, record the pointer deflection on the AN/URM–85 test set panel-mounted meter.

d. Throw the POWER switch on Generator Pulse, SG-128/U to OFF.

e. On the unit under test:

(1) Throw the calibration switch to SHUNT CAL.

(2) Throw the IMPULSE GENERATOR switch to ON.

(3) Set the IMPULSE GENERATOR COARSE and FINE controls to those settings which produce the same pointer deflection on the main unit panel-mounted meter as were obtained in *c* (5) above. The settings of the AN/URM–85 IMPULSE GENERATOR output controls must correspond within ±1 db of the numbers shown on the calibration charts.

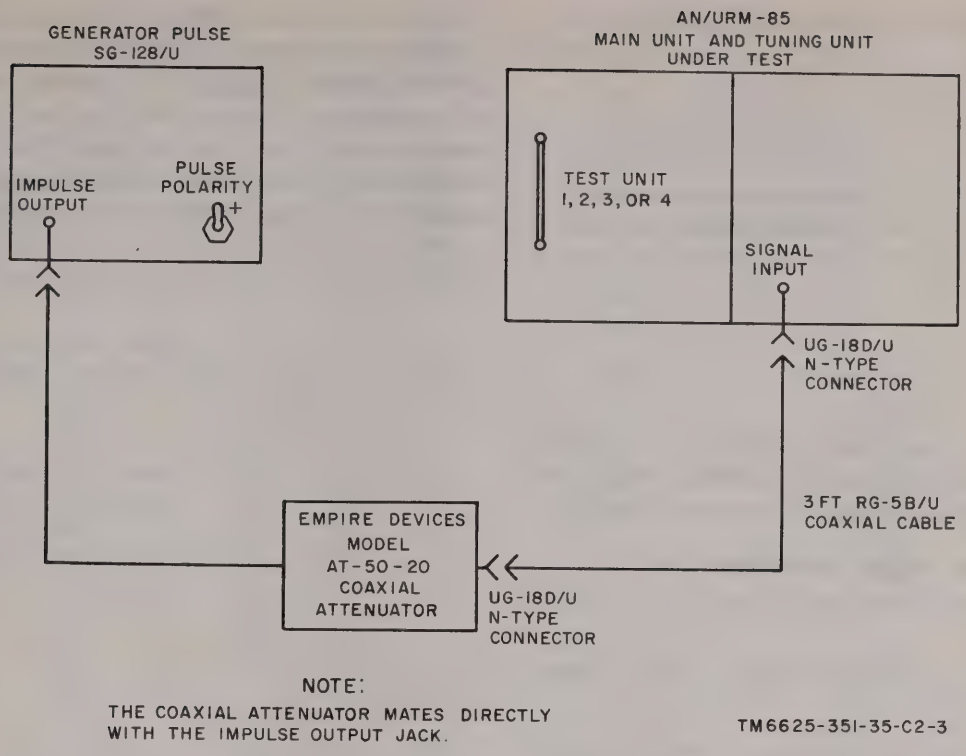

Figure 95.3. Test setup for interference measurement.

122. Gain Versus Frequency Test

Note: No signal generator is required for the following test:

a. Throw the calibration switch to SHUNT CAL.

b. Rotate the IMPULSE GENERATOR output level controls to produce a sum of 60.

c. Rotate the SIGNAL ATTENUATOR DB control to 20.

d. Rotate the function switch to CW PEAK.

e. Scan each band to determine the frequency which produces the highest indication on the main unit panel-mounted meter. At this frequency, adjust the GAIN control to produce full-scale meter indication.

f. After noting the frequency producing the maximum response, rescan the band. The change in meter reading between the largest amplitude response and the smallest amplitude response must not exceed 20 db.

123. Cw Sensitivity Test

a. With a tuning unit plugged into the tuning unit compartment, use the same test setup as in figure 95.1, except for setting the variable step attenuator to the 10 db position. Use the applicable signal generator (para. 116) for the tuning unit under test.

b. Set the AN/URM–85 front panel controls as follows:

(1) Rotate the SIGNAL ATTENUATOR DB control to 0 CW ONLY.

(2) Rotate the function switch to CW AVERAGE.

(3) Throw the calibration switch to SERIES CAL & OPERATE.

c. Adjust the signal generator level control and the AN/URM–85 tuning unit GAIN control to produce a pointer deflection of 10 microvolts on the lower calibrated scale of the AN/URM–85 panel-mounted meter.

d. Reduce the signal generator output level to zero, and record the residual noise level indicated on the AN/URM–85 meter. This residual level must not exceed the values listed in the chart that follows:

Tuning unit under test	Cw sensitivity (microvolts)
1	0.5
2	1.0 when operating from 20 mc up to 100 mc; or 1.5 when operating above 100 mc up to 220 mc.
3	5
4	5.5

e. Repeat *a* through *d* above at the high and low end of each frequency band, and at five equally spaced frequencies over each band.

124. Impulse Noise Sensitivity Test

Note: No signal generator is required for the following test.

a. Set the AN/URM–85 front panel controls as follows:

(1) Rotate the SIGNAL ATTENUATOR DB control to 0 SUBST ONLY.

(2) Rotate the function switch to PULSE PEAK.

(3) Throw the calibration switch to SHUNT CAL.

(4) Throw the IMPULSE GENERATOR switch to OFF.

(5) Rotate the tuning unit GAIN control to produce a 0-db pointer deflection on the panel-mounted meter.

b. Throw the IMPULSE GENERATOR switch to ON, and set the IMPULSE GENERATOR COARSE and FINE output level controls to produce a 20-db indication on the upper meter scale. The sum of the COARSE and FINE output level control settings must not exceed the values listed in the chart that follows:

Tuning unit under test	Impulse noise sensitivity (db above 1 microvolt per mc)
1	54
2	45, when operating from 20 mc up to 70 mc; or 48, when operating above 70 mc up to 220 mc.
3	45
4	45

c. Repeat *a* and *b* above at the high and low end of each frequency band, and at five equally spaced frequencies over each band.

125. Image Rejection Test

a. With a tuning unit plugged into the tuning unit compartment, connect the applicable signal generator for the tuning unit under test, as indicated in paragraph 123*a*.

b. Set the AN/URM–85 front panel controls as directed in paragraph 123*b*.

c. Tune the signal generator to the lowest frequency of the tuning unit under test. Adjust the signal generator output level control and the tuning unit GAIN control to produce a 9 full-scale indication on the AN/URM–85 panel-mounted meter. Use a 1-microvolt test signal when checking tuning unit 1; use a 10-microvolt test signal when checking tuning unit 2, 3, or 4. Record the signal generator output level control setting, in db, required to produce the full-scale meter indication.

d. Retune the signal generator to the nearest image frequency, which is twice the intermediate frequency of the tuning unit under test plus the fundamental frequency. Typical image frequencies for the lowest frequency of each band of the four tuning units are listed in the following chart:

Tuning unit	Band (mc)	IF amplifier center frequency (mc)	Image frequency for lowest frequency of the band (mc)
1	0.15 – 0.36	0.455	1.06
	0.36 – 0.87	1.6	3.56
	0.87 – 2.1	0.455	1.78
	2.1 – 5.2	1.6	5.3
	5.2 – 12.7	1.6	8.4
	12.7 – 30	1.6	15.9
2	20 – 70	10.7	41.4
	70 – 220	10.7	98.4
3	200 – 400	42	284
4	400 – 700	42	484
	700 – 1000	42	784

e. After determining the image frequency for the frequency point under test, apply this image signal frequency from the signal generator to the AN/URM–85 test set.

f. Increase the signal generator level control setting to produce a full-scale meter indication. The ratio of the two signal generator output level control settings in db (this step and *c* above) must meet the requirement of the following chart:

Tuning unit under test	Minimum image rejection (db)
1	40
2	70, when operating from 20 mc up to 70 mc; or 35, when operating above 70 mc up to 220 mc
3	35
4	40, when operating from 400 mc up to 700 mc; or 35, when operating above 700 mc up to 1,000 mc

g. Repeat *c* through *f* above at the middle and highest frequency points of each band for all tuning units.

126. IF Rejection Test

a. With a tuning unit plugged into the tuning unit compartment, connect the applicable signal generator for the tuning unit under test, as directed in paragraph 123*a*.

b. Set the AN/URM–85 front panel controls as directed in paragraph 123*a*.

c. Repeat the procedure of paragraph 125*c*.

d. Retune the signal generator to the IF amplifier center frequency of each band, as listed in the chart in paragraph 125*d*.

e. Apply this IF amplifier center frequency test signal to the AN/URM–85 test set.

f. Increase the signal generator level control setting to produce a full-scale meter indication. The ratio of the two signal generator output level control settings in db (this step and *c* above) must meet the requirements of the chart which follows:

Tuning unit under test	Minimum IF rejection (db)
1	50, for 0.15 mc to 0.36 mc band only; or 60, for all bands except 0.15 mc to 0.36 mc.
2	55, when operating from 20 mc up to 40 mc; or 70, when operating above 40 mc up to 220 mc.
3	70
4	70

g. Repeat *c* through *f* above at the middle and highest frequency points of each band for all tuning units.

127. RF-IF Attenuator Test

Set up the equipment as shown in figure 95.1, except substitute model AT-106H attenuator panel for model AT-103-C. Repeat *a, b,* and *c* below, at the low, middle, and high end of each frequency band of each tuning unit.

a. Calibrate the AN/URM–85 as follows:

(1) For tuning unit 1, set model AT-106H to 80 db and the attenuator of the AN/URM–85 to 0 CW ONLY. Adjust the output of the signal generator to obtain 10 microvolts on the AN/URM–85 input terminal. Adjust the GAIN control to obtain a full-scale indication on the main unit panel-mounted meter.

(2) For tuning unit 2, 3, or 4, set model AT-106H to 60 db, and the AN/URM–85 main unit step attenuator to 20 db. Adjust the output of the signal generator to obtain 100 microvolts on the AN/URM–85 input terminal.

b. For tuning unit 1, add 20 db of attenuation to the AN/URM–85 step attenuator and decrease the model AT-106H attenuation setting by 20 db. The reading on the AN/URM–85 panel-mounted meter should be constant within plus and minus 20 percent. Repeat for every position of the main unit attenuator, up to the 80 db position.

c. For tuning units 2, 3, and 4, set the AN/URM–85 SIGNAL ATTENUATOR DB to 0 CW ONLY, and model AT-106H attenuator to 80 db, and repeat the procedure in *b* above.

Note: Add as much isolation attenuation in the line as possible, and still obtain 100 microvolts at the AN/URM–85 input terminal. The 1-db steps of model AT-106H attenuator may be used.

128. Calibration as Two-Terminal RF Voltmeter

Use the following procedure to calibrate the AN/URM–85 as a two-terminal RF voltmeter. Start with the lowest frequency shown on calibration charts 4A and 4B, for each tuning unit. The final result of this procedure is to obtain correspondence of values with those inscribed on the calibration charts, within ± 1.6 db.

a. For tuning unit 1, 2, or 3, connect a recently calibrated signal generator (with its output level calibrated to an accuracy of ± 0.2 db) through model AT-50-10 attenuator pad (see note, *g* below) to the SIGNAL INPUT jack of the AN/URM–85 main unit. Use the same test setup as shown in figure 95.1, except substitute the model AT-50-10 attenuator for the model AT-103-C.

b. Set the function switch to CW AVERAGE, and the calibration switch to SERIES CAL & OPERATE.

c. If tuning unit 1 is used, set the SIGNAL ATTENUATOR DB control to CW ONLY; if tuning unit 2, 3, or 4 is used, set the SIGNAL ATTENUATOR DB control to the 20 db position.

d. Set the signal generator output level to provide a 10-microvolt signal at the input terminals of the AN/URM–85 for tuning unit 1, or to provide a 100-microvolt signal for tuning unit 2, 3, or 4. Adjust the GAIN control to obtain a reading of 20 db on the AN/URM–85 panel-mounted meter.

e. Change the setting of the function switch to CW PEAK, and the calibration switch to SHUNT CAL.

f. Turn the IMPULSE GENERATOR switch to ON, and adjust the level controls to again

obtain a 20-db reading on the main unit panel-mounted meter. Record the setting of the IMPULSE GENERATOR level controls.

g. Repeat *a* through *f* above at every frequency shown on calibration charts 4A and 4B, which are supplied with each AN/URM–85 test set.

Note: If the 10-db isolation pad is too large to provide a signal of the proper amplitude at the AN/URM–85 input terminal, reduce the attenuation value of this pad until the signal is high enough.

h. For tuning unit 4, connect the equipment as shown in figure 95.4. The signal generator power output level must be calibrated to an accuracy of ±0.2 db.

i. Throw the READ-CALIBRATE switch on the switching unit (fig. 95.4) to READ, and adjust the power output of the signal generator to obtain an indication of 100,000 microvolts on the power meter.

j. Throw the READ-CALIBRATE switch on the switching unit (fig. 95.4) to CALIBRATE, and complete *b* through *g* above, checking the power with the power meter at each new frequency point.

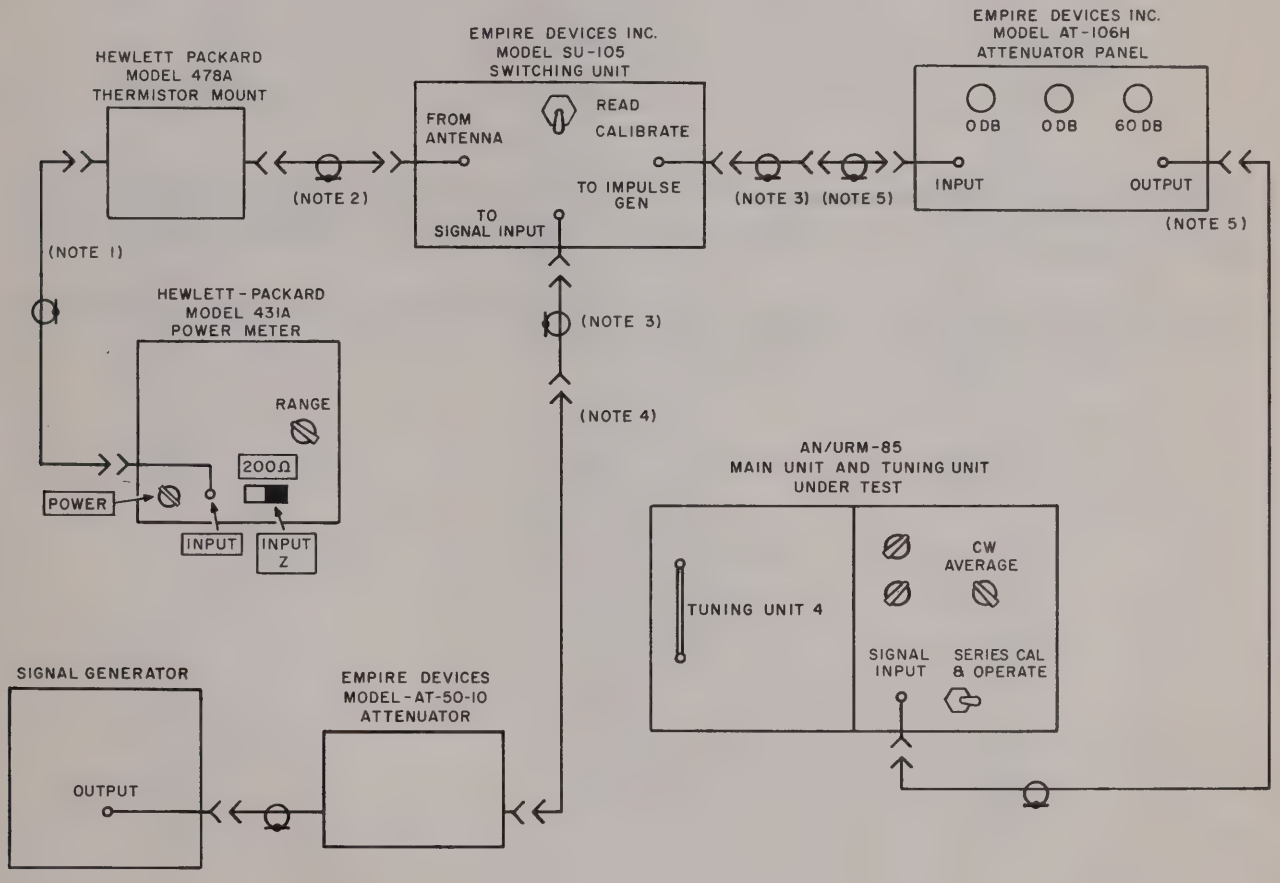

NOTES:

1. ACCESSORY CABLE SUPPLIED WITH POWER METER.
2. 2 FT RG-58/U COAXIAL CABLE WITH 1 EACH UG-1095/U TYPE N CONNECTOR ON ONE END AND 1 EACH UG-88/U TYPE BNC CONNECTOR ON THE OTHER END.
3. UG-349/U BNC MALE TO N FEMALE ADAPTER.
4. 3-FT RG-58/U COAXIAL CABLE WITH 1 EACH UG-18D/U N TYPE CONNECTOR AT EACH END.
5. 2 FT RG-58/U COAXIAL CABLE WITH 1 EACH UG-18D/U N TYPE CONNECTOR AT EACH END.

TM6625-351-35-C2-4

Figure 95.4. Test setup for calibrating tuning unit as two-terminal voltmeter.

129. Bandwidth Test

a. The impulse bandwidth of the test set is determined by calibrating the instrument as a two-terminal RF voltmeter (para. 128).

b. The following chart indicates the impulse bandwidth limits. The numbers recorded in the *Impulse generator in db above 1 uv/mc* columns of calibration charts 4A and 4B, which are supplied with each AN/URM-85 test set, must be within these limits.

Tuning unit	Band	Frequency (mc)	Impulse bandwith (db)
1	1	0.15 – 0.36	63 to 70
	2, 3, 4	0.36 – 5.2	57 to 64
	5, 6	5.2 – 30.0	55 to 61
2	1, 2	20.0 – 220	59 to 65
3	1	200 – 400	45 to 50
4	1, 2	400 – 1000	44 to 49

Page 239, figure 99 (foldout), upper left (Z1) (as changed by C 1, 24 Oct. 62). Make the following changes:

Change the valve of capacitor C6 to: 540 $\frac{\mu\mu f.}{Mu}$

Remove resistor R2 from the primary winding of transformer T2 and place it across the secondary winding (terminals 11 and 12.

Change the valve of resistor R2 to 1 megohm.

By Order of the Secretary of the Army:

HAROLD K. JOHNSON,
General, United States Army,
Chief of Staff.

Official:

KENNETH G. WICKHAM,
Major General, United States Army,
The Adjutant General.

Distribution:

Active Army:

USASA (2)
CNGB (1)
OCC-E (7)
Dir of Trans (1)
CofEngrs (1)
TSG (1)
CofSpts (1)
USAARENBD (2)
USAAVNTBD (5)
USACDC Agcy (1)
USAMC (5)
USCONARC (5)
ARADCOM (5)
ARADCOM Rgn (2)
OS Maj Comd (4)
USARYIS (5)
LOGCOMD (2)
USAMICOM (4)
USASTRATCOM (4)
USAESC (70)
USASTRATCOM-EUR (8)
USASTRATCOM-SO (8)
USACOMZEUR (5)
USASA (Pac) (5)
USASA (Eur) (5)
MDW (1)
Armies (2) except
  First USA (8)
  Fourth USA (8)
Corps (2)
USAC (3)
12th USASA Fld Sta (5)
1st Cav Div (5)
Svc Colleges (2)
USAADS (2)
USAAMS (2)
USAARMS (2)
USAIS (2)
USAES (2)
USASESS (10)
USATC Armor (2)
USATCFLW (2)
USATC Inf (2)
USASTC (2)
WRAMC (1)
Army Pic Cen (2)
USACDCEC (10)
USAINTC (5)
USAJFKCENSPWAR (5)
ARADMAC (5)
Instl (2) except
  Fort Gordon (10)
  Fort Huachuca (10)
  Fort Carson (21)
  Fort Knox (12)
  Fort Belvoir (5)
  WSMR (5)
  APG (5)
  JCA, Fort Ritchie (5)
Army Dep (2) except
  LBAD (14)
  SAAD (30)
  TOAD (14)
  LEAD (7)
  SHAD (3)
  NAAD (5)
  SVAD (5)
  CHAD (3)
  ATAD (10)
GENDEPS (2)
Sig Sec GENDEPS (5)
Sig Dep (12)
Sig FLDMS (2)
AMS (1)
USAERDAA (2)
USAERDAW (13)
USACRREL (2)
MAAG (2)
USARMIS (2)
USARMA (2)
Units org under fol TOE:
  (2 copies each)
  11-57
  11-97
  11-98
  11-117
  11-127
  11-155
  11-157
  11-158
  11-500 (AA-AC)
  11-587
  11-592
  11-597

NG: None

USAR: None

For explanation of abbreviations used, see AR 320-50.

☆U.S. GOVERNMENT PRINTING OFFICE: 1967 -302-010/658

Technical Manual
No. 11-6625-351-35

HEADQUARTERS,
DEPARTMENT OF THE ARMY
WASHINGTON 25, D.C., *15 March 1962*

RADIO INTERFERENCE MEASURING SET AN/URM-85

			Paragraph	Page
CHAPTER	1.	THEORY		
Section	I.	System block diagram	1-7	2–10
	II.	Theory of main unit	8-24	11–33
	III.	Theory of tuning unit 1	25-33	35–47
	IV.	Theory of tuning unit 2	34-41	47–58
	V.	Theory of tuning unit 3	42-49	58–69
	VI.	Theory of tuning unit 4	50-58	69–81
	VII.	Theory of minor components	59-62	81–89
CHAPTER	2.	TROUBLESHOOTING		
Section	I.	General troubleshooting techniques	63-65	91–93
	II.	Troubleshooting test set	66-75	106–164
CHAPTER	3.	REPAIRS AND ALIGNMENT		
Section	I.	Repairs	76-80	166–188
	II.	Alignment	81-98	190–213
CHAPTER	4.	FINAL TESTING	99-113	217 -227
APPENDIX		REFERENCES		231
INDEX				232

CHAPTER 1

THEORY

Section I. SYSTEM BLOCK DIAGRAM

1. Scope

a. This manual covers field and depot maintenance for Radio Interference Measuring Set AN/URM-85. It includes instructions appropriate to third, fourth, and fifth echelons for troubleshooting, testing, and repairing the equipment, and for replacing maintenance parts. It also lists tools, materials, and test equipment for fourth, and fifth echelon maintenance. There are no maintenance functions allocated to third echelon. Detailed functions of the equipment are covered in the theory sections.

b. The complete technical manual for this equipment includes TM 11-6625-351-12, TM 11-6625-351-20P, and TM 11-6625-351-35P.

c. Forward comments concerning this manual to the Commanding Officer, U. S. Army Signal Materiel Support Agency, ATTN: SIGMS-PA2d, Fort Monmouth, N.J.

Note: For applicable forms and records, see paragraph 2, TM 11-6625-351-12.

d. Refer to DA Pamphlet 310-4 to determine what Changes to or revisions of this publication are current.

2. General Application

Radio Interference Measuring Set AN/URM-85 is a portable test set which is used in four different applications.

a. One application is the measurement of the field intensity of radiated continuous wave (cw), amplitude modulation (am.) or frequency modulation (fm) signals. These measurements are usually expressed in microvolts per meter (uv/m). The figure is obtained by dividing the potential difference between the receiving antenna system and ground by the distance, in meters, between those two points. A more practicable method to determine field strength consists of measuring the voltage induced across an antenna by a passive wave and applying the following formula:

Formula $$\underline{FS} = \frac{\underline{E_a}}{\underline{h_c}}$$

Where: $\underline{FS}$ = field strength in microvolts per meter,

$\underline{E_a}$ = voltage induced across the antenna in microvolts,

$\underline{h_c}$ = effective height of antenna in meters.

Both the panel-mounted meter and the remote multimeter of the test set have scales which are calibrated in microvolts (uv) (10 uv full scale) and in decibles (db) (20-db full scale). A measurement is meaningful only after the meter has been calibrated by applying the output of the self-contained impurse generator to the system.

(1) The test set indicates the voltage E_a that is present at the SIGNAL INPUT connector of the main unit.

(2) The effective height h_c of the antenna which is used for the measurement is provided by reference to graphs, supplied in the calibration book accompanying each serial numbered model of the equipment. Typical graphs showing the antenna factor versus frequency appear in TM 11-6625-351-12.

b. A second application of this test set is the use of the instrument as a tunable two-terminal radiofrequency (rf) voltmeter. In this application, the output signal from such rf signal sources as a radio receiver, a tuned rf amplifier, a local oscillator, or a signal generator, is conductively coupled to the SIGNAL INPUT connector of the main unit, without the use of an antenna. The input impedance of the test set is 50 ohms in all positions of the SIGNAL ATTENUATOR DB control, except in the 0 SUBST. ONLY position.

c. A third application of this test set is

the measurement of broadband radio interference (noise). Broadband interference is produced by switching transients in electronic and electrical equipment, such as that caused by the throwing of switches, vibrating electrical contacts of relays, rotation of commutators, electrical arcing or sparking, and other sudden changes in electric or magnetic potentials. This type of interference normally consists of short-duration pulses that have either a comparatively regular or a random repetition rate and amplitude. For measuring purposes, broadband interference is expressed in terms of *microvolts per unit of bandwidth,* such as microvolts per kilocycle (uv/kc) of bandwidth or microvolts per megacycle (uv/mc) of bandwidth. In these measurements, the peak value of the interfering signal is used.

(1) Assume that a signal of 1 uv/mc of bandwidth is applied to the input of a radio receiver with an equivalent noise bandwidth of 1 mc.

(2) The definition of a 1 uv/mc of bandwidth signal is as follows: it is the peak value of that broadband signal which produces a specific output from this receiver. If a cw signal of 1 microvolt is then applied to the input of this receiver, the output will be equivalent to that produced by the broadband signal.

d. A fourth application of this test set is the measurement of the field intensity of broadband radio interference (noise). These measurements, expressed in microvolts per megacycle per meter (uv/mc/m), are used when the test set is located in the *far field* of a radiating antenna. In this application, the peak amplitude of the noise signal under measurement is indicated on the meter. An antenna factor, which accounts for the effective height of the antenna (*a* above), and a correction factor for losses in the rf cable must be added to the meter indication. Typical graphs of antenna factors are provided in TM 11-6625-351-12. One graph is applicable when the vertical or loop antenna is used with tuning unit 1 (150 kc to 30 mc frequency range); a second graph is applicable when the appropriate dipole antenna is used with tuning unit 2, 3, or 4 (20- to 1,000-mc frequency range).

3. Shunt Method of Calibration Using Internal Signal Source

a. General. The signal path for calibrating the test set by the shunt method of calibration is shown in figure 1. Basically, a self-contained inpulse generator is used as a calibrating signal to produce a full-scale meter indication. The setting of six-step signal attenuator AT702 control determines the amount of rf and intermediate frequency (if.) attenuation inserted into the signal path. After the meter is calibrated for a full-scale meter indication, the impulse generator is deenergized. The magnitude of the rf signal under measurement (fig. 2) is then directly read from the meter scale, taking into account the setting of the six-step signal attenuator control. The following subparagraphs, based on placing the main unit calibration switch in the SHUNT CAL position, give a brief functional description of the calibrating signal path.

b. Impulse Generator Circuit. With IMPULSE GENERATOR DB ABOVE 1UV/MC ON-OFF switch S705 in the ON position, the signal path is produced as follows:

(1) *Repetition rate generator and driver V703.* Repetition rate generator V703A is a resistance-capacitance type oscillator which produces a fixed output of approximately 70 cycles per second (cps). This output, increased in amplitude by impulse generator driver stage V703B, is fed to impulse generator G701.

(2) *Impulse generator G701.* The impulse generator produces a broadband signal by the transient discharge of a direct-current (dc) voltage on a short length of coaxial line, working into a 50-ohm impedance load. A mercury switch, operated by impulse generator driver stage V703B, opens and closes the coaxial line pulse-forming circuit.

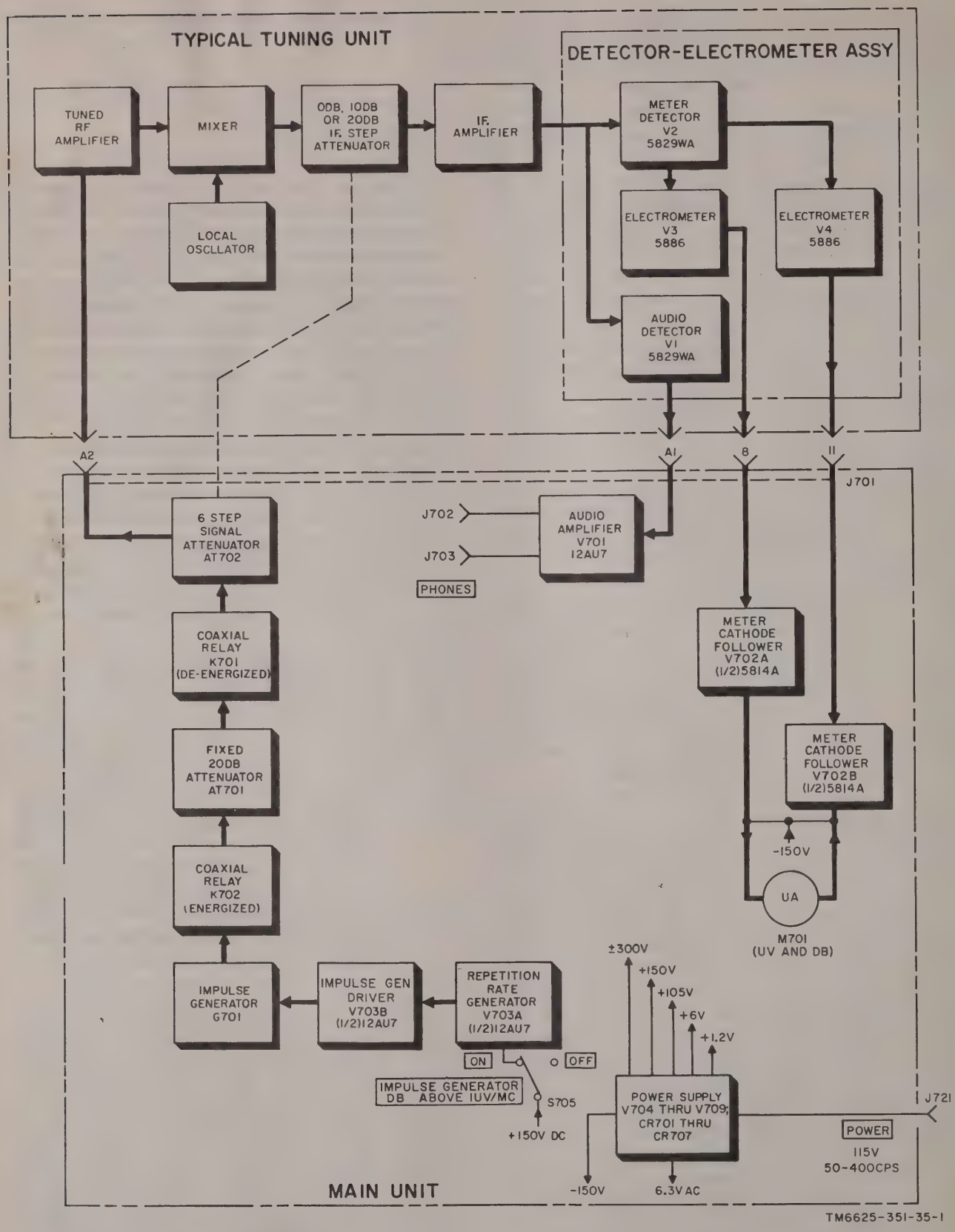

Figure 1. Shunt method of calibration, using internal signal source.

c. Coaxial Relays and Attenuators.

(1) *Coaxial relay K702.* With this relay in its energized condition, the output of the impulse generator is coupled through a set of relay contacts to 20-db fixed attenuator AT701.

(2) *Fixed attenuator AT701, 20-db.* This fixed attenuator, coaxial in structure, attenuates the signal from the impulse generator by 20-db and couples the signal to de-energized coaxial relay K701. With this 20-db fixed attenuator in the calibrating signal path, the output of the impulse generator agrees with the engraved numerals on the front-panel coarse and fine impulse generator controls.

(3) *Coaxial relay K701.* With this relay in its deenergized condition, the output of 20-db fixed attenuator AT701 is coupled through one set of relay contacts to six-step signal attenuator AT702.

(4) *Six-step signal attenuator AT702.* This cartridge-type attenuator has a flat response to the complete frequency range of the test set, from 150 kc to 1,000 mc. Six steps of attenuation are provided by the use of coaxial networks, which result in a low-voltage standing wave ratio (swr) at any input frequency. Each attenuator section is a resistive *T*-pad, in which the series elements are rod resistors, and the shunt element is a disk-type resistor. The geometry of the innter and outer conductors of each attenuator section produces a 50-ohm line impedance at the input and output of each network. Two settings of the six-step signal attenuator control provide zero attenuation of the calibrating signal. The four remaining settings provide 10-, 20-, 40-, or 60-db loss in the rf signal path; additional attenuation of 10 or 20-db is inserted into the if. signal path (fig. 2). This loss is introduced by operation of relays in the if. step attenuator, which are controlled by the setting of six-step signal attenuator AT702. The division of attenuation between the rf and the if. signal paths maintains an optimum signal-to-noise ratio.

d. Typical Tuning Unit. The attenuated signal is coupled from six-step signal attenuator AT702 to the input of the tuning unit in use, through multipin connector J701 (on the main unit) and its mating plug (on the rear of each tuning unit). The typical tuning unit shown is representative of tuning units 1 through 4; however, circuit variations exist in each because of the different frequency ranges encountered.

(1) *Rf section.* In the tuned rf amplifier, the signal is amplified and coupled to the mixer stage, which also receives a signal from the local oscillator. Sum and difference frequencies are produced in the mixer stage, but only the difference frequency is accepted by the if. amplifier.

(2) *If. step attenuator.* The output of the mixer stage is coupled to a three-step if. attenuator, which operates with rotation of the signal attenuator control (c(4) above).

(3) *If. amplifier.* The difference frequency from the mixer stage is amplified by a conventional transformer-coupled if. amplifier. The output signal is applied to the sealed detector-electrometer assembly.

(4) *Detector and electrometer assembly.* This assembly is identical and is interchangeable in all four tuning units. Two detectors are included within the assembly. One detector provides drive for the audio amplifier in the main unit. The other detector provides drive, through high-impedance electrometer stages, for the vacuum-type voltmeter indicating circuit in the main unit.

e. Indicating Circuits. Two indicating circuits are provided in the main unit.

(1) *Aural.* The aural indication is derived from electrometer assembly audio detector V1. Its output signal is coupled through terminal A1 of

plug (at the rear of the tuning unit) amd mating jack J701 (on the interior wall of the main unit). The output signal drives audio amplifier V701 in the main unit. The amplified audio voltage produces an aural indication of modulated signals when one or two headsets are plugged into PHONES jacks J702 and J703, respectively, on the main unit front panel.

(2) *Meter.* The meter indication is derived from meter detector V2 and electrometers V3-V4. The output from electrometer V3 is coupled through terminal 8 of the tuning unit plug and the corresponding terminal of main unit jack J701 to cathode follower V702A. The output from electrometer V4 is coupled through terminal 11 of the tuning unit plug and the corresponding terminal of main unit jack J701 to cathode follower V702B. These two cathode followers, together with meter M701, make a bridge-type vacuum-tube voltmeter. The meter employes a logarithmic 0- to 100-microampere movement, and has two scales. One scale is calibrated from -6 to +20-db; the second scale is calibrated from 0 to 10 microvolts.

f. Power Supply. The power supply provides seven different outputs for the various circuits of the test set (fig. 1). The input voltage required at the front-panel POWER receptacle J721 is 115 volts, 50- to 400-cps. A complete block diagram of the power supply is shown in figure 5.

4. Shunt Method of Calibration Using Incoming Rf Signal (fig. 2)

Figure 2 is a block diagram which shows detailed operation of the equipment after the meter has been calibrated to produce a full-scale deflection by using the output of the impulse generator as a calibrating signal source. Setting the front-panel calibration switch to the SERIES CAL & OPERATE position changes the circuit connections from those described in paragraph 3.

a. Signal Pickup Device. This block diagram shows one of the three dipole antennas connected, through the balanced-to-unbalanced transformer (balun) and the red color-coded rf cable, to the SIGNAL INPUT jack of the main unit. This color-coded rf cable is part of Electrical Cable Assembly Set MX-3410/URM-85. A separate and distinct dipole antenna is used to cover the full operating frequency ranges of tuning units 2, 3, or 4. When tuning unit 1 is in operation, either the loop or vertical antenna must be used, and the test set is calibrated by the series method (para 5). The other signal pickup devices which require shunt calibration of the meter depend on the method of coupling the signal to the input of the test set. They are used as described below:

(1) For conductive measurements, the input from power or audio-signal lines under test is connected to the test set by special coupling networks. The following minor components are used for conductive measurements:

Minor component (common name)	Nominal line impedance	Frequency range
50-ohm conductive coupler for tuning unit 1.	50-150 ohms	150 kc to 30 mc
500-ohm conductive coupler for tuning unit 1.	150-500 ohms	150 kc to 30 mc
50-ohm conductive coupler for tuning units 2, 3, and 4.	50-150 ohms	20 to 1,000 mc
500-ohm conductive coupler for tuning units 2, 3, and 4.	150-500 ohms	20 to 1,000 mc

(2) For pinpointing the source of rf noise interference from an instrument under test, the inductive method of coupling is used. The following minor components are used for inductive measurements:

Minor component (common name)	Characteristic	Frequency range
Magnetic field probe for tuning unit 1.	Localizes magnetic field components of rf energy over the frequency range of tuning unit 1.	150 kc-30 mc.

Minor component (common name)	Characteristic	Frequency range
Magnetic field probe for tuning units 2, 3, and 4.	Localizes magnetic field components of rf energy over the frequency range of tuning units 2 through 4.	20-1,000 mc.
Electric field probe.	Localizes electric field components of rf energy over the frequency range of tuning units 1 through 4.	150 kc-1,000 mc.

b. Coaxial Relay K701 and Six-Step Signal Attenuator AT702.

(1) *Coaxial relay K701.* This relay is energized in the SERIES CAL & OPERATE position of calibration switch S706. Under this condition, the incoming rf signal is passed through a set of relay contacts to the input signal attenuator AT702.

(2) *Six-step signal attenuator AT702.* The cartridge-type attenuator functions identically with that described in paragraph 3c(4). The output of the attenuator is coupled through terminal A2 of main unit jack J701 to the corresponding terminal of the mating tuning unit plug.

c. Tuning Unit and Indicating Circuits. The signal flow through the tuning unit and indicating circuits is identical with that described in paragraph 3. The intensity of the incoming rf signal is read directly from the meter, and is added to the setting of the SIGNAL ATTENUATOR DB control. For precise measurements, the loss in the 30-foot length of rf cable is added to the calculation. If the 500-ohm conductive coupler is used in the measurements, a constant factor of 26-db must also be added to the final calculation.

5. Series Method of Calibration (fig. 3)

Figure 3 is a block diagram which shows the signal path when the discone (broadband) antenna is used as the signal pickup device over the frequency range from 20 to 1,000 mc. The block diagram shows only the basic sections: the signal pickup device and a portion of the circuits housed in the main unit. The remainder of the main unit circuits and the complete tuning unit are identical with those described in paragraph 4. In the series method of calibration, the output of impulse generator G701 is injected into the signal pickup device, so that the calibrating signal path is in series with the incoming rf signal under measurement into the main unit and tuning unit.

Note: When operating over the range from 150 kc to 30 mc (with tuning unit 1), the loop or vertical antenna must be substituted for the discone antenna.

a. Coupling To and From Signal Pickup Device. Both the green color-coded and the red color-coded rf cables are connected between the two front-panel jacks (J705 and J717) and the corresponding jacks on the injection block. The output of impulse generator G701 is coupled through a set of contacts of deenergized coaxial relay K702 and through the green color-coded rf cable to the input of the injection block. The calibrated signal is reduced in amplitude by a 20-db fixed attenuating network, housed within the injection block, before being coupled to the return path in series with the rf incoming signal. (When operating over the frequency range of tuning unit 1, either the loop or vertical antenna is used as the signal pickup device; both of these antennas have identical 20-db fixed attenuators housed within their bases.) The attenuated calibrated signal is coupled in series with the rf signal under measurement, through the red color-coded rf cable, to the SIGNAL INPUT jack on the main unit front panel.

b. Signal Path. The path of the combined unknown-amplitude rf signal and the known-amplitude calibrating signal through the receiver section is identical with that described in paragraph 4. To obtain a meter indication of the level of the unknown signal, without the series addition of the calibrating signal, it is only necessary to deenergize the impulse generator by setting IMPULSE GENERATOR DB ABOVE 1 μV/MC ON-OFF switch S705 to the OFF position. To obtain a meter indication of the level of the calibrating signal, it is best to deenergize the signal source. If the signal source cannot be deenergized, an alternate procedure consists

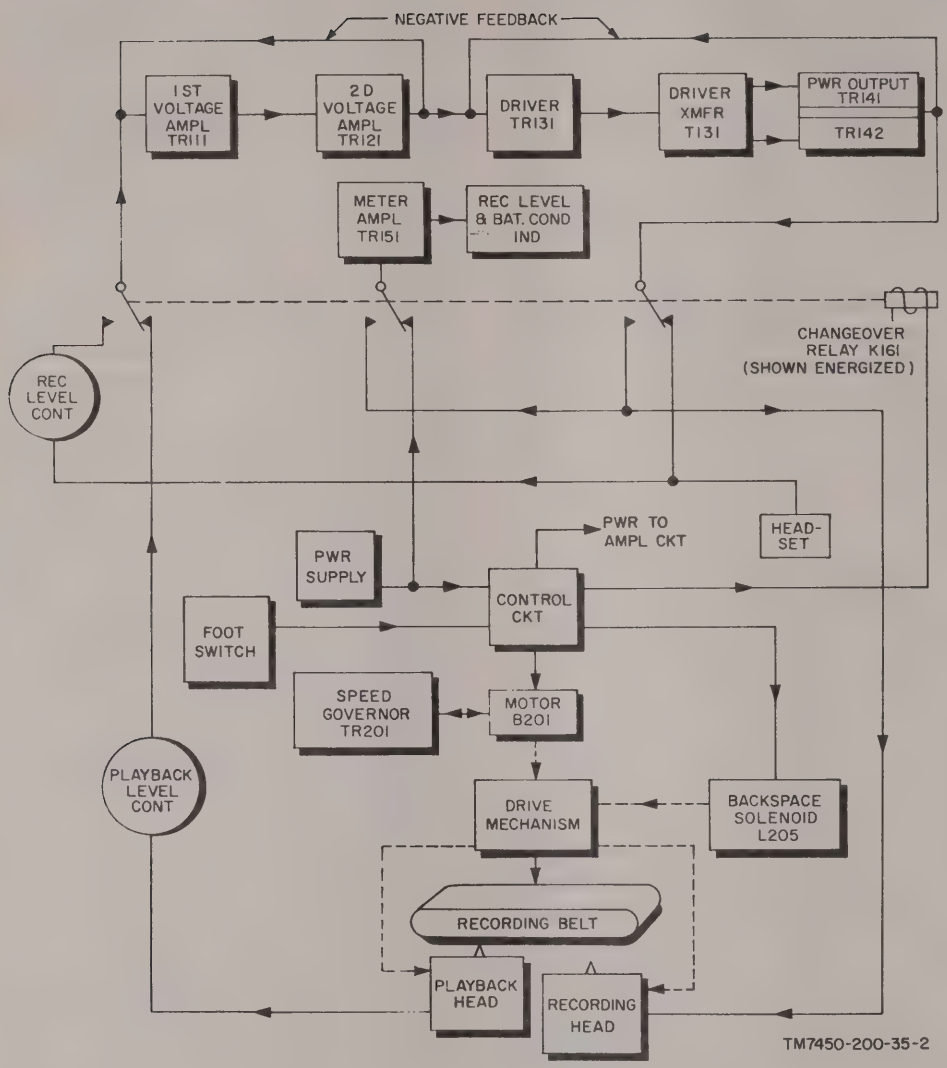

Figure 2. Shunt method of calibration, using incoming rf signal.

of setting the output controls of the impulse generator to produce a meter pointer deflection which is 1-db higher than the pointer deflection caused by the incoming rf signal alone. The intensity of the incoming rf signal is then determined by adding the meter indication (in db) to the setting of the SIGNAL ATTENUATOR DB control, and subtracting 1-db from the total value.

6. Basic Methods of Measurement (fig. 1, 2, and 3)

Amplitude and frequency measurements of narrow-band and broadband signals may

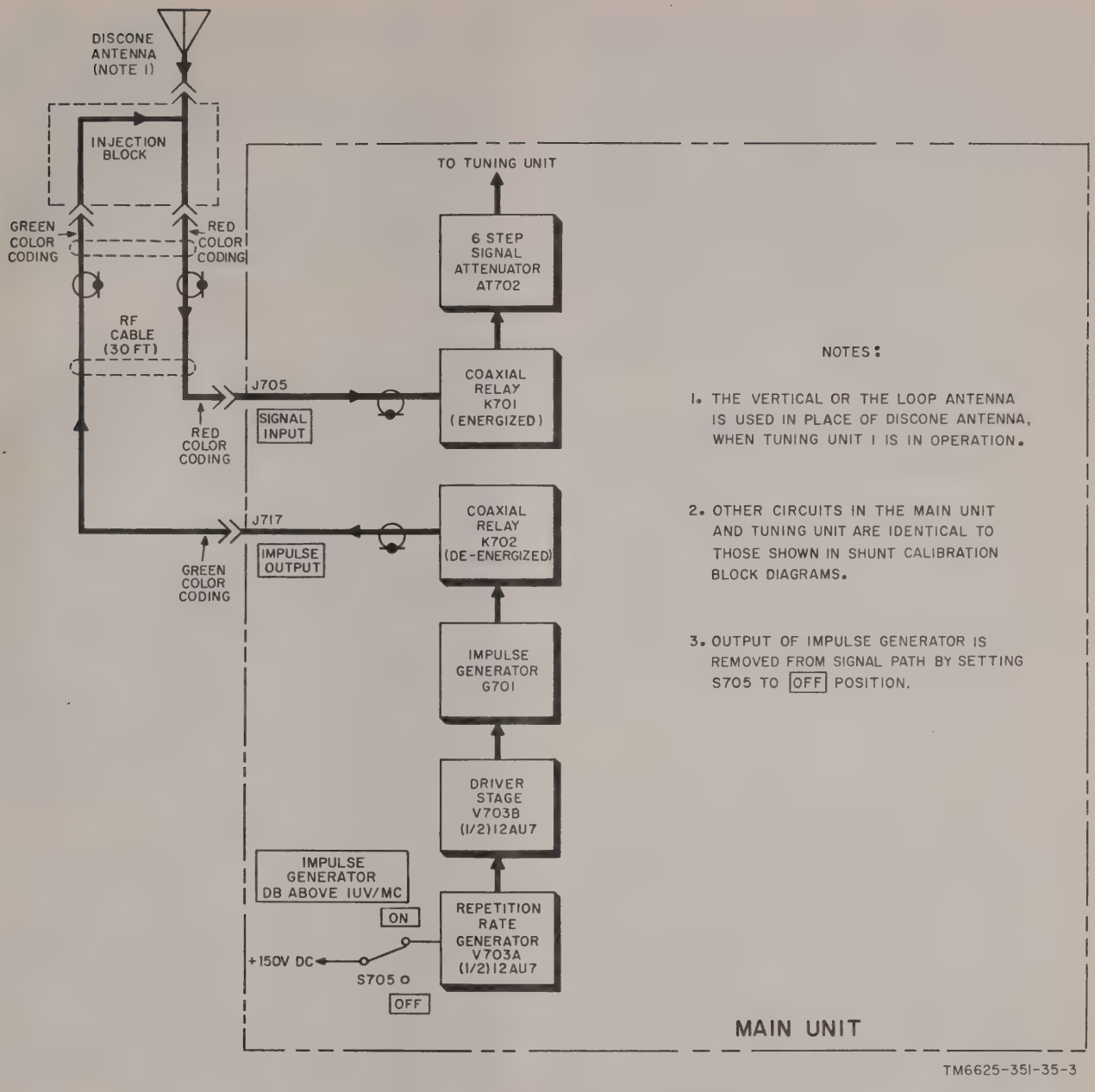

Figure 3. Series method of calibration.

be obtained with this test set by different basic methods of operation.

a. Direct Reading. One is the direct reading method, in which the output of the self-contained impulse generator is applied to the input circuit, while the incoming rf signal is effectively removed from this circuit (fig. 1). The output controls of the impluse generator are set to produce a full-scale meter indication, with the setting of the SIGNAL ATTENUATOR DB control determining the full-scale meter reading. For example: with the SIGNAL ATTENUATOR DB control at its 0 CW ONLY position, the meter's decibles and microvolts scales are read directly, indicating 20-db above 1 microvolt full scale (equivalent to 10 microvolts full scale). By the insertion of 20-db of attenuation in the signal path, the meter calibration is changed so that 40-db above 1 microvolt is now the full-scale indication (equivalent to 100 microvolts full scale). The test set provides additional steps of attenuating

networks as shown in the following chart. After the meter has been calibrated by the use of the self-contained calibrating signal, the impulse generator is disabled and the incoming rf signal is applied to the receiver. The meter pointer deflection is read directly, taking into account the setting of the SIGNAL ATTENUATOR DB control. For precise measurements, the loss in the 30-foot length of rf cable is added to the meter indication. Figures 1 and 2 show the signal paths for this method of measurement, when the shunt method of calibration is used.

SIGNAL ATTENUATOR DB control setting	Full-scale meter indication (in db above 1 microvolt)	Full-scale meter indication (in microvolts unless otherwise indicated)
40	60	1,000
60	80	10,000
80	100	100,000
80 (plus the insertion of Fixed Attenuator CN-721/URM-45 between the rf cable and the SIGNAL INPUT jack).	140	10 volts

b. Substitution Method. A second basic method of operating the test set is through the substitution method of measurement. This technique is used when the loop, vertical, or discone antenna is the signal pickup device for broadband (noise) signals. In this method of procedure, the known amplitude output of the impulse generator is substituted for the previously unknown amplitude of the signal under measurement. Figure 3 shows the signal path for this method of measurement, when using the series method of calibrating the meter. Essentially, this method reverses the sequence of operations described in *a* above in the following manner:

(1) The incoming rf signal is applied to the receiver without initially calibrating the meter. The meter pointer deflection and the setting of the SIGNAL ATTENUATOR DB control are noted.
(2) The incoming rf signal is disabled.
(3) The coarse and fine output front-panel controls of the impulse generator are set so that the meter indicates the same amplitude as that produced by the incoming rf signal.
(4) The value of the incoming rf signal is read from the settings of the impulse generator coarse and fine output front-panel controls.

7. Introduction to Unit Theory

The signal flow and basic functioning of the test set in the shunt and series methods of calibration have been discussed in this section. The following sections cover a detailed analysis of the test set on a unit-by unit description.

a. Section II analyzes the circuits housed in the main unit, which consists of rf output switching and attenuation, metering, audio amplification, and power supply.

b. Section III describes the detailed functioning of tuning unit 1. This unit houses a six-position turret tuner and rf circuit, if. input, attenuation, output switching circuits, two separate if. amplifier subassemblies (one tuned to 455 kc; the other tuned to 1,600 kc), and the detector-electrometer assembly.

c. Section IV presents a description of the circuits housed in tuning unit 2. These are a two-band rf section whose resonance to incoming rf signals is varied by changing the setting of an *inductuner* circuit, a three-step if. attenuator, a single if. amplifier subassembly (operating at 10.7-mc center frequency), and a detector-electrometer assembly which is identical in all four tuning units.

d. Section V follows the detailed signal path in tuning unit 3. This unit covers its complete frequency spectrum in one band, using an rf tuner whose resonance to incoming rf signals is varied by gear-driving a three-section air-dielectric capacitor. The if. signal path consists of an if. preamplifier housed in one subassembly, a three-step if. attenuator housed in another subassembly, and a main if. amplifier housed in a third subassembly. Both the if. preamplifier and main amplifier operate at a center frequency of 42 mc. The

detector-electrometer assembly completes the major subassemblies housed in this tuning unit.

e. Section VI sets forth the distinctive features of tuning unit 4. This unit includes two separate rf tuners, each of which employs a low-noise rf amplifier triode of planar electrode construction, operating, in a tuned coaxial one-quarter wavelength transmission line. The local oscillator circuit within each rf tuner is a conventional triode, operating in a tuned one-half wavelength transmission line. The heterodyne output of a silicon diode crystal mixer is coupled to an if. preamplifier, a three-step if. attenuator, and a main if. amplifier, identical with the signal path of tuning unit 3. The detector electrometer assembly completes the components housed in this tuning unit.

Section II. THEORY OF MAIN UNIT

8. Block Diagram of Main Unit (fig. 1)

Figure 1 shows a block diagram of the five circuits which are housed in the main unit. These circuits are the audio amplifier, the cathode follower and meter, the rf input and impulse generator, the signal attenuator, and the power supply. For a complete schematic diagram of the main unit, refer to figure 98. A block diagram description of these five major circuits is given in paragraphs 9 through 13. Circuit description of individual stages of the main unit is given in paragraphs 14 through 24.

9. Block Diagram of Audio Amplifier (fig. 1)

This circuit receives its driving voltage from audio detector V1 in the detector-electrometer assembly through terminal A1 of main unit jack J701 and the corresponding terminal on the tuning unit plug. The output of the audio amplifier produces an aural signal which is monitored by connecting one or two headsets into the PHONES jacks provided on the main unit front panel.

10. Block Diagram of Cathode Followers and Metering Circuit (fig. 1)

Cathode followers V702A and V702B receive separate input signals from the detector and electrometer assembly within each tuning unit. Each section of the cathode follower reproduces its input signal and applies the difference in amplitude to the metering circuit to produce a meter indication. Signal flow in each circuit is as follows:

a. Cathode Follower V702A. The input to V702A is coupled from electrometer V3 in the tuning unitmthrough terminal 8 of main unit connector J701. The input signal amplitude at V702A is the same as the input signal amplitude at electrometer V3, because of the extremely high-impedance characteristics of the electrometer circuit.

b. Cathode Follower V702B. The input to V702B is coupled from electrometer V4 in the tuning unit through terminal 11 of main unit connector J701. The input signal amplitude at V702B is approximately one-third of the input signal amplitude to the detector and electrometer assembly. This reduction in signal amplitude is caused by a voltage-divider network at the input to meter detector V2. Therefore, cathode follower V702B produces a smaller amplitude signal than cathode follower V702A. The difference in the outputs of V702B and V702A is applied to the metering circuit.

11. Block Diagram of Rf Input and Impulse Generator Circuits (fig. 1, 2, and 3)

Since the rf input circuit and the impulse generator circuits are closely interrelated in signal flow, this paragraph describes the effect of the front-panel calibration switch on their circuit operation. The positioning of the calibration switch depends on the antenna or coupler which is used at the input to the test set. Shunt calibration (a

below) is required when the dipole antenna or coupler devices are used. Series calibration (*b* below) is required when the discone, loop, or vertical antenna is used. In either series or shunt calibration, the setting of the six-step signal attenuator (*c* below) affects the signal path.

a. Shunt Calibration Condition (fig. 1 and 2). The following two circuit conditions exist with the calibration switch set at the SHUNT CAL position.

(1) The calibrating signal voltage from impulse generator G701 has a path of continuity through coaxial relay K702 to the input of 20-db fixed attenuator AT701. The calibrating signal is decreased in amplitude by a ratio of 10 to 1 (20-db), and is applied through coaxial relay K701 to the input of six-step signal attenuator AT702.

(2) The incoming rf signal applied to SIGNAL INPUT jack J705 (fig. 2) is effectively removed from the input to the test set. Therefore, no incoming signal from the antenna or coupler can affect the meter indication when the test set is being calibrated by the shunt method.

b. Series Calibration and Operate Condition (fig. 2 and 3). The following two circuit conditions exist with the calibration switch set at the SERIES CAL & OPERATE position.

(1) An incoming signal, applied from the antenna or coupler through SIGNAL INPUT jack J705, has a path of continuity through coaxial relay K701 to six-step signal attenuator AT702.

(2) The calibrating signal voltage from impulse generator G701 is interrupted from the input to 20-db fixed attenuator AT701 (fig. 1) by de-energizing coaxial relay K702 Therefore, 20-db fixed attenuator AT701 is effectively removed from the calibrating signal path and the full calibrating signal voltage is available at front-panel IMPULSE OUTPUT jack J717 (fig. 3).

c. Signal Attenuating Circuit. Figure 3 shows that the incoming rf signal passes through six-step signal attenuator AT702 before application to the input of the tuning unit. The purpose of the signal attenuator is to insert either zero or a fixed amount of resistive attenuation in the rf and if. signal path. This circuit arrangement is described in paragraph 12.

12. Block Diagram of Signal Attenuator AT702 Circuitry (fig. 4)

Figure 4 shows the threefold functioning of the six-step SIGNAL ATTENUATOR DB control. This block diagram is based on placing the front-panel calibration switch in the SERIES CAL & OPERATE position (fig. 2). The shaft of the front-panel SIGNAL ATTENUATOR DB control drives three separate switches, which operate circuits as described below:

a. Rf Attenuating Circuit. The incoming rf signal is coupled through front-panel SIGNAL INPUT jack J705 and coaxial relay K701. This relay is energized in the SERIES CAL & OPERATE position of the calibration switch, and a path of continuity is created to the input of rf six-step signal attenuator AT702. The six positions of the SIGNAL ATTENUATOR DB control have the following effect on the incoming rf signal:

(1) In the 0 SUBST. ONLY position, zero attenuation is inserted in the rf signal path. Since the test set input circuit is not terminated with a 50-ohm impedance in this position of the attenuator, quantative measurements are meaningful only if the substitution method of operation (para 6*b*) is used. The 0 SUBST. ONLY position of the attenuator is usually used for taking relative measurements of broadband (noise) signal amplitude with the magnetic field probe, the electric field probe, or the conductive couplers.

(2) In the 0 CW ONLY position, 10-db of attenuation is inserted in the rf signal path. This position of the control provides a 50-ohm termination to match the characteristic

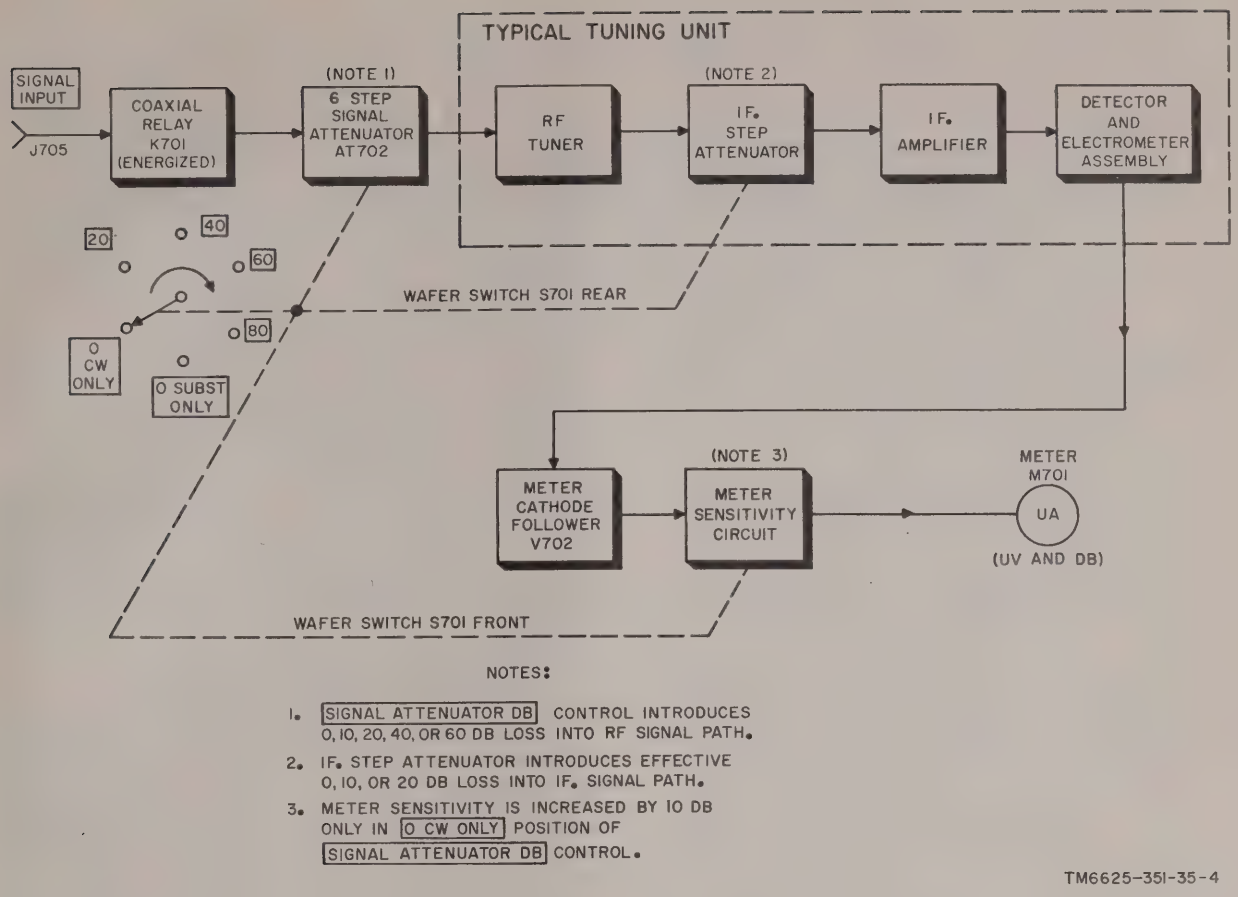

Figure 4. SIGNAL ATTENUATOR DB control circuitry, block diagram.

impedance of the signal input coaxial cable. In addition, only this position of the control rotates wafer switch S701 (front) to a contact that changes the full-scale indication (the sensitivity) of the panel-mounted meter by +10-db.

(3) In the 20 position, 10-db of attenuation is inserted in the rf signal oath. Wafer switch S701 (front) is simultaneously rotated to a position that restores the full-scale indication of the meter to its original sensitivity. Wafer switch S701 (rear) is simultaneously rotated to a position that introduces 10-db of attenuation in the if. signal path.

(4) In the 40 position of the control, 20-db of attenuation is inserted in the rf signal path. Simultaneously, wafer switch S701 (rear) is rotated to a position that introduces 20-db of attenuation in the if. signal path.

(5) In the 60 position of the control, 40-db of attenuation is inserted in the rf signal path. Simultaneously, wafer switch S701 (rear) is rotated to a position that continues to introduce a 20-db of attenuation in the if. signal path.

(6) In the 80 position of the control, 60-db of attenuation is inserted in the rf signal path. Simultaneously, wafer switch S701 (rear) is rotated to a position that continues to introduce 20-db of attenuation in the if. signal path.

b. If. Attenuating Circuit. The insertion of fixed steps of attenuation in the if. signal path is performed by the action of the rear section of wafer switch S701. In the 0 SUBST. ONLY and 0 CW ONLY positions of this switch, no if. attenuation is

inserted in the signal path. In the 20 position, the -150-volt output of the power supply has a path of continuity to one of the two relays in the if. step attenuator. When energized, this relay inserts a 10-db resistive pad in the if. signal path. However, in the 40, 60, and 80 positions of S701, the -150-volt output of the power supply also has a path of continuity to the second relay in the if. step attenuator. When both relays in the if. attenuator assembly are energized, a total network resulting in 20-db of attenuation is inserted in the if. signal path.

c. Meter Sensitivity Circuit. The 0 CW ONLY position of the SIGNAL ATTENUATOR DB control inserts a 50-ohm resistive termination in the rf signal path for proper impedance matching. While this termination produces a 10-db loss in rf signal amplitude, wafer switch S701 (front) removes a multiplier resistor from the dc metering signal path. The value of this multiplier resistor is equivalent to a 10-db gain in meter sensitivity; the meter full-scale indication is effectively changed from 10 microvolts to 1 microvolt. Therefore, with 10-db of attenuation inserted in the rf signal path, the overall result is zero attenuation in the combined rf and dc meter signal path.

13. Block Diagram of Power Supply (fig. 5)

The power supply provides all of the power requirements for the circuits in the main unit and in the tuning unit. A simplified representation of the power supply is shown in the shunt calibration block diagram (fig. 1 and 2). The flow of power and the development of low-voltage alternating current (ac) and rectified dc voltages is shown in the detailed block diagram (fig. 5).

a. Ac Input and Output Power. Ac input is connected to the main unit at POWER receptacle J721. The voltage is fed through POWER switch S710 to interlock switch S711 and protective fuse F701. The interlock switch is closed when a tuning unit is plugged into the opening provided at the left side of the main unit. When a tuning unit is removed from the main unit, interlock switch S711 opens and the ac input power path is interrupted from the remainder of the circuitry. The closed condition of interlock switch S711, or the use of the alignment harness, permits ac power to flow through vibrating-type regulator K703 into the primary windings, terminals 1 and 2, of power transformer T702. One secondary winding, terminals 17 and 18, steps down the 115-volt ac input to 6.3-volts ac output, which is used as heater power by all electron tubes except audio amplifier V701 and the stages housed in the detector and electrometer assembly. Another secondary winding, terminals 14 and 16, steps down the 115-volt ac input to 5.8-volts ac. This power is used in the heater circuit of audio amplifier V701 and detectors V1 and V2 in the electrometer assembly.

b. +150-Volt Unregulated Power Circuit. The 115-volt ac power at the primary of power transformer T702 is stepped up in voltage through a center-tapped secondary winding, terminals 3, 4, and 5. Parallel-connected rectifiers V704 and V705 produce a dc output of approximately +175-volts with respect to chassis ground. This output is filtered and dropped in value by the double L-type filter, which consists of reactor L722 and capacitor C734, and is used as 150-volt B+ power for all stages except the local oscillators in the tuning units and all tubes in the detector and electrometer circuit. The dc output of V704-V705 is also used as a reference voltage for vibrating-type regulator K703. This reference voltage is applied to the coil of the vibrating-type regulator, which applies varying amounts of resistance in series with the ac input power, depending on input line fluctuations and output load variations.

c. +105-Volt Regulated Power Circuit. The 105-volt regulated output is derived from the 150-volt power supply. This 105-volt output is regulated by voltage regulator tube V708, and is used as B+ voltage by the local oscillators in each tuning unit.

d. -150-Volt Regulated Power Circuit. Metallic rectifier CR706 is connected to

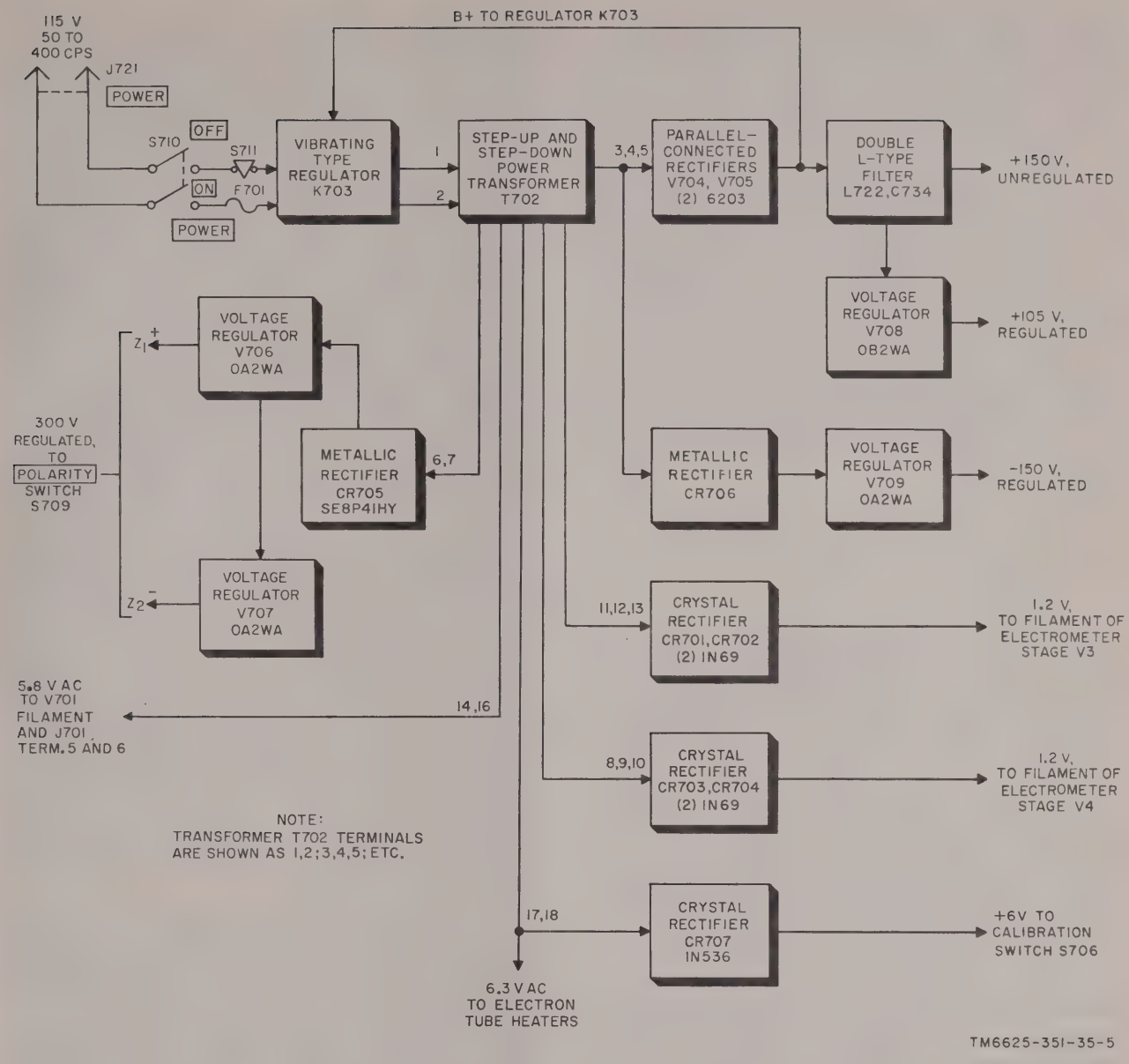

Figure 5. Power supply, block diagram.

the high-voltage center-tapped secondary winding at terminals 3 and 5 of power transformer T702. The dc output of the diode is maintained at -150 volts with respect to chassis ground by voltage regulator V709.

e. 1.2-Volt Power Circuits. Two separate outputs of 1.2-volts are provided for electrometer stages V3 and V4. One output is developed by the connection of crystal rectifiers CR701 and CR702 to the center-tapped secondary winding (terminals 11, 12, and 13) of power transformer T702. The second output is developed by an identical pair of crystal rectifiers, CR703 and CR704, which are connected to an additional center-tapped secondary winding (terminals 8, 9, and 10) of power transformer T702.

f. +6-Volt Power Circuit. Crystal diode CR707 is connected to the 6.3-volt ac secondary winding (terminals 17 and 18) of power transformer T702. The rectified 6-volt dc output of this diode is used as energizing voltage for coaxial relays K701 and K702, through the toggle action of calibration switch S706.

g. ±300-Volt Power Circuit. Another

high-voltage secondary winding of transformer T702 (terminals 6 and 7) is connected to metallic rectifier CR705. The output of this rectifier is regulated at 300-volts by two series-connected voltage regulators V706 and V707. This output is used as either positive or negative, with respect to chassis ground, by POLARITY switch S709. The output of this 300-volt supply is connected in series with an additional positive or negative supply to produce from 300- to 450-volts output of either polarity. Polarity switching is provided so that the pulsed output of the impulse generator can be either positive or negative with respect to chassis ground, depending on test circuit conditions.

14. Power Supply, Analysis of Input Circuits (fig. 6)

The power supply provides all of the power requirements for the circuits in the main unit and in the tuning unit. The input voltage is controlled by a vibrating-type regulator. Three of the dc output voltages are controlled by voltage regulator tubes. Paragraph 13 presents a block diagram description of the power supply (fig. 5). The following subparagraphs describe circuit functioning with reference to the simplified schematic diagram (fig. 6).

a. Ac Input Circuit. Ac power at 115-volts, 50- to 400-cps, is connected to the main unit at three-terminal POWER receptacle J721. Terminals A and B of J721 receive power from the two input legs of the ac powerline. Terminal C serves as a grounding pin to prevent electrical shock to operating personnel. Terminal A of J721 is connected by one section of filter FL-703, the OFF position of POWER switch S710, fuse F701, the primary winding (terminals 1 and 2) of transformer T702, and filter FL705 to the armature on vibrating-type regulator K703. Terminal B of J721 is connected through the second section of filter FL703 and the ON position of POWER switch S710 to interlock switch S711. This interlock provides a path of continuity for terminal B leg of the ac input powerline when a tuning unit is fully inserted within the main unit. (Interlock switch S711 breaks the ac input circuit when a tuning unit is withdrawn from the main unit.) Receptacle J722, located on the main unit compartment for the tuning unit (fig. 46), is provided as a means of bypassing interlock switch S711 when operation of a tuning outside of the main unit is required. For example, this type of operation is necessary when aligning (or taking voltage and resistance measurements on) a tuning unit. The two-prong connector, P901, is part of the alignment harness. With this connector inserted in receptacle J722 (and with the two interlock switches on the alignment harness closed), the terminal B leg of the ac input line has a path of continuity through filter FL704 to the common side of voltage-dropping resistors R764 to R769 and R771 to R774. The ac input circuit to terminal 2 of transformer T702 is completed by the path of continuity created when one or more of the shunt resistors (R764 to R769 and R771 to R774) or the shorting link at terminal 5 of relay K703 makes contact with the relay armature. Filters FL703, FL704, and FL705 and capacitor C727 prevent interference of relay contact arcing from affecting the sensitive circuits of the test set.

b. Vibrating-Type Regulator K703. Vibrating-type regulator K703 is made up of three basic elements: a current-sensitive signal coil (terminals 13 and 14), a set of contact fingers (terminals 1 through 11), and a pivoted contact bar. The magnetic circuit of the signal coil is closed through a moving armature. As the armature moves, a lever arm pushes the contact fingers off a common contact bar one at a time. The contact fingers are electrically connected to terminals at the base of the vibrating type regulator. As the fingers close, externally mounted resistors R764 through R769 and R771 through R774 are connected, one at a time, to the control circuit. The pivoted contact arm is attached to the lever arm through a coupling spring.

c. Regulating Circuit. Two major forces act on the armature: The magnetic

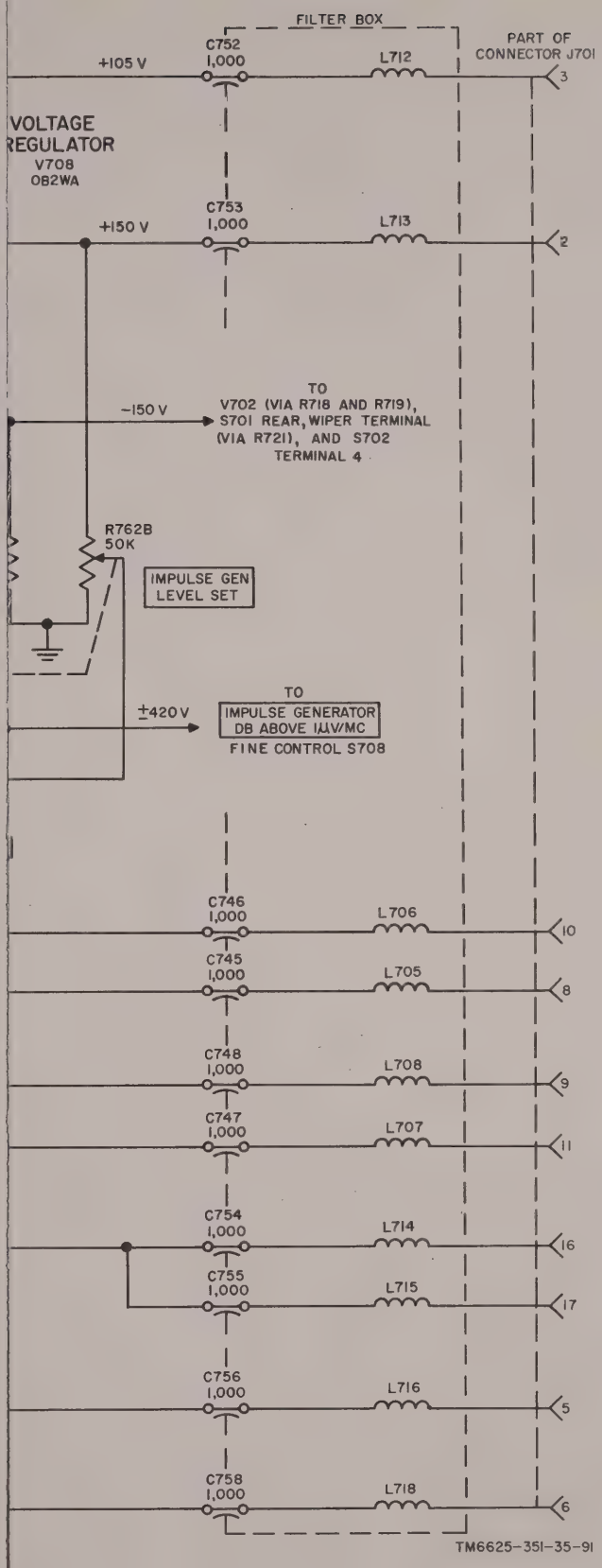
FILTER BOX
C752
1,000
+105 V
L712
PART OF
CONNECTOR J701
3
VOLTAGE
REGULATOR
V708
OB2WA
C753
1,000
+150 V
L713
2
TO
V702 (VIA R718 AND R719),
S701 REAR, WIPER TERMINAL
(VIA R721), AND S702
TERMINAL 4
−150 V
R762B
50K
IMPULSE GEN
LEVEL SET
TO
IMPULSE GENERATOR
DB ABOVE IMW/MC
FINE CONTROL S708
±420 V
C746
1,000
L706
10
C745
1,000
L705
8
C748
1,000
L708
9
C747
1,000
L707
11
C754
1,000
L714
16
C755
1,000
L715
17
C756
1,000
L716
5
C758
1,000
L718
6
TM6625-351-35-91

am.

high-voltage secondary winding of transformer T702 (terminals 6 and 7) is connected to metallic rectifier CR705. The output of this rectifier is regulated at 300-volts by two series-connected voltage regulators V706 and V707. This output is used as either positive or negative, with respect to chassis ground, by POLARITY switch S709. The output of this 300-volt supply is connected in series with an additional positive or negative supply to produce from 300- to 450-volts output of either polarity. Polarity switching is provided so that the pulsed output of the impulse generator can be either positive or negative with respect to chassis ground, depending on test circuit conditions.

14. Power Supply, Analysis of Input Circuits (fig. 6)

The power supply provides all of the power requirements for the circuits in the main unit and in the tuning unit. The input voltage is controlled by a vibrating-type regulator. Three of the dc output voltages are controlled by voltage regulator tubes. Paragraph 13 presents a block diagram description of the power supply (fig. 5). The following subparagraphs describe circuit functioning with reference to the simplified schematic diagram (fig. 6).

a. Ac Input Circuit. Ac power at 115-volts, 50- to 400-cps, is connected to the main unit at three-terminal POWER receptacle J721. Terminals A and B of J721 receive power from the two input legs of the ac powerline. Terminal C serves as a grounding pin to prevent electrical shock to operating personnel. Terminal A of J721 is connected by one section of filter FL-703, the OFF position of POWER switch S710, fuse F701, the primary winding (terminals 1 and 2) of transformer T702, and filter FL705 to the armature on vibrating-type regulator K703. Terminal B of J721 is connected through the second section of filter FL703 and the ON position of POWER switch S710 to interlock switch S711. This interlock provides a path of continuity for terminal B leg of the ac input powerline when a tuning unit is fully inserted within the main unit. (Interlock switch S711 breaks the ac input circuit when a tuning unit is withdrawn from the main unit.) Receptacle J722, located on the main unit compartment for the tuning unit (fig. 46), is provided as a means of bypassing interlock switch S711 when operation of a tuning outside of the main unit is required. For example, this type of operation is necessary when aligning (or taking voltage and resistance measurements on) a tuning unit. The two-prong connector, P901, is part of the alignment harness. With this connector inserted in receptacle J722 (and with the two interlock switches on the alignment harness closed), the terminal B leg of the ac input line has a path of continuity through filter FL704 to the common side of voltage-dropping resistors R764 to R769 and R771 to R774. The ac input circuit to terminal 2 of transformer T702 is completed by the path of continuity created when one or more of the shunt resistors (R764 to R769 and R771 to R774) or the shorting link at terminal 5 of relay K703 makes contact with the relay armature. Filters FL703, FL704, and FL705 and capacitor C727 prevent interference of relay contact arcing from affecting the sensitive circuits of the test set.

b. Vibrating-Type Regulator K703. Vibrating-type regulator K703 is made up of three basic elements: a current-sensitive signal coil (terminals 13 and 14), a set of contact fingers (terminals 1 through 11), and a pivoted contact bar. The magnetic circuit of the signal coil is closed through a moving armature. As the armature moves, a lever arm pushes the contact fingers off a common contact bar one at a time. The contact fingers are electrically connected to terminals at the base of the vibrating type regulator. As the fingers close, externally mounted resistors R764 through R769 and R771 through R774 are connected, one at a time, to the control circuit. The pivoted contact arm is attached to the lever arm through a coupling spring.

c. Regulating Circuit. Two major forces act on the armature: The magnetic

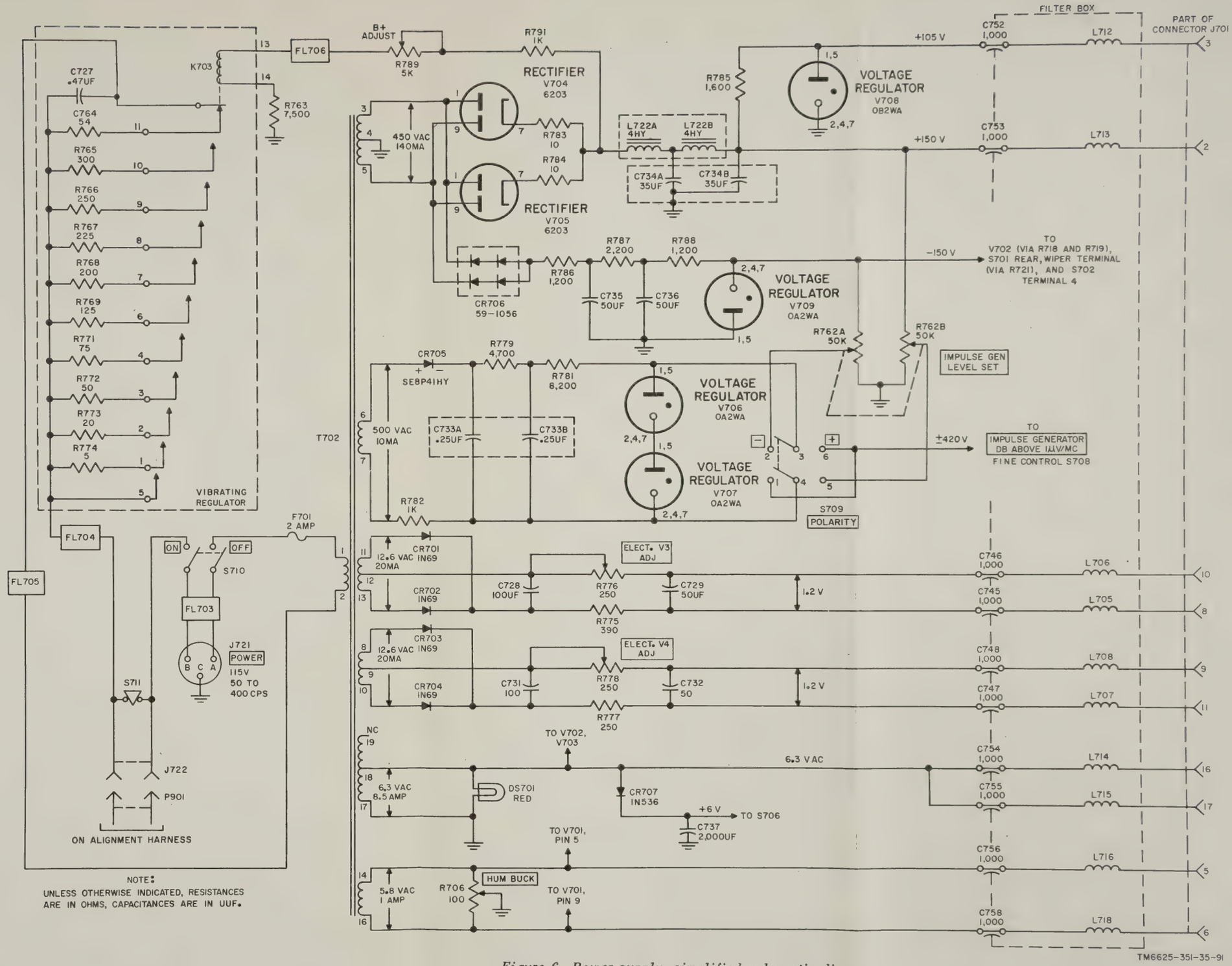

Figure 6. Power supply, simplified schematic diagram.

pull through K703 signal coil, which receives energizing power from rectifiers V704 and V705, and the pull of the springs. If the current through the signal coil is kept constant at a nominal value, the magnetic pull will increase in a linear manner as the armature moves to close more and more fingers. The armature is in mechanical equilibrium only when the current flowing through signal coil K703 is at its nominal B+ value. For all other values of signal coil current, equilibrium is upset and the armature moves to open or close the contact fingers. Resistors R764 through R769 and R771 through R774 are connected into the control circuit path from one side of interlock switch S711 to terminal 1 of T702 primary winding. Therefore, the function of the vibrating-type regulator is to control the amount of resistance in the ac input power line circuit. The B+ adjust control (R789) is used to set the nominal amount of current through K703 signal coil. Resistor R791 functions as a current-limiting device and is connected between the output of rectifiers V704-V705 and the B+ adjust control. Filter FL706 filters the current in the B+ line; resistor R763 functions as a further current-limiting device for K703 signal coil.

15. Power Supply, Analysis of Output Circuits (fig. 6)

The power supply develops outputs of +150-volts, +105-volts, +6-volts, and -150-volts with respect to chassis ground. Two additional outputs, each of 1.2-volts dc, are produced. A 5.8-volt ac and a 6.3-volt ac output is developed for electron tube heater power. A final circuit develops ±300-volts dc for use by the coaxial delay line charging circuit of impulse generator G701.

a. +150-Volt and +105-Volt Dc Power Circuit. One secondary winding (terminals 3, 4, and 5) of T702 steps up the input voltage to 450-volts. Rectifier tubes V704 and V705, connected in a full-wave circuit, rectify the stepped up voltage. Resistors R783 and R784 are voltage-dropping resistors. The fluctuating dc voltage is smoothed by a choke-input filter network consisting of L722A, C734A, L722B, and C734B. The +150-volt filtered output is connected to terminal 2 of main unit receptacle J701 as plate and screen voltage for all tubes in the tuning unit except the oscillator stage in the rf tuner. Resistor R785 serves as an additional voltage-dropping resistor to develop a +105-volt output, which is controlled by voltage regulator V708. This output is connected to terminal 3 of J701 as plate voltage for the oscillator tubes in the tuning unit.

b. -150-Volt Dc Power Circuit. The full output (terminals 3 and 5) of T702 secondary winding (*a* above) is also connected to the cathodes of the dual full-wave rectifier CR706. The negative output is filtered by resistors R786 and R787 and capacitors C735 and C746. Resistor R788 is the voltage-dropping resistor in series with regulator V709, which holds the output at -150-volts with respect to chassis ground. This potential is used as grid and cathode voltage by cathode follower stage V702, as energizing voltage for the two relays in the if. step attenuator of the tuning unit, and as the source of bias voltage for the if. amplifiers in the tuning unit.

c. +6-Volt Dc Power Circuit. Crystal rectifier CR707, connected in a half-wave circuit, rectifies the 6.3-volt ac power developed across terminals 17 and 18 of T702. The dc output, filtered by capacitor C737, is connected to calibration switch S706, and is used to energize either coaxial relay K701 or K702, depending on the switch position.

d. 1.2-Volt Dc Power Circuit for Electrometer V3. One secondary winding (terminals 11, 12, and 13) steps down the ac input voltage to 12.6-volts. Crystal rectifiers CR701 and CR702, connected in full-wave circuit, rectify the secondary voltage. The output is filtered by a pi-section filter, consisting of variable resistor R776 and capacitors C728 and C729. Resistor R776 is used to adjust the dc output of the rectifiers to 1.2-volts, which is connected to terminals 8 and 10

of main unit receptacle J701. These terminals supply heater power for electrometer V3, in the detector and electrometer assembly of the tuning unit. Resistor R775 is a voltage-dropping resistor.

e. 1.2-Volt Dc Power Circuit for Electrometer V4. One secondary winding (terminals 8, 9, and 10) of T702 performs the same function as that described in *d* above. Crystal rectifiers CR703 and CR704, connected in a full-wave circuit, rectify the secondary voltage. The output is filtered by a pi-section filter that consists of variable resistor R778 and capacitors C731 and C732. Resistor R778 is used to adjust the dc output to 1.2-volts, which is connected to contacts 9 and 11 of main unit receptacle J701. These terminals supply heater power for electrometer V4, in the detector and electrometer assembly of the tuning unit. Resistor R777 is a voltage-dropping resistor.

f. 5.8-Volt Ac Power Circuit. One secondary winding (terminals 14 and 16) of T702 provides heater current for audio amplifier V701 and for the two detector stages housed in the tuning unit. Potentiometer R706 is connected across the 5.8-volt ac input to the heater terminals of V701, pins 5 and 9. The arm of R706 operates at chassis ground potential. The 5.8-volt ac input voltage across V701 heater is divided in half by setting the arm of potentiometer R706 at the midpoint of its range. This setting of R706 tends to cancel out any hum that may be picked up and amplified by audio amplifier V701. The full 5.8-volts ac is available at terminals 5 and 6 of main unit receptacle J701. The mating plug at the rear of a tuning unit applies this 5.8-volt ac heater power to the two detector stages within the detector and electrometer assembly.

g. 6.3-Volt Ac Power Circuit. One center-tapped secondary winding of transformer T702 (terminals 17 and 18) provides heater current for all tubes and pilot lamps in the equipment, except for those tubes housed within the detector and electrometer assembly. Heater power is coupled through terminals 16 and 17 of main unit receptacle J701 to the mating plug on the tuning unit.

h. ±300-Volt Dc Power Circuit. One secondary winding (terminals 6 and 7) steps up the input voltage to 500-volts. The voltage is rectified by a half-wave metallic-type rectifier CR705. The rectifier output is filtered by a pi-type network which consists of resistor R779 and the two sections of a dual capacitor C733. Resistor R781 is the voltage-dropping resistor for the series-connected regulators V706 and V707, which holds the output at 300-volts. Resistor R782 is a voltage-dropping resistor. The output can be reversed in polarity by setting POLARITY switch S709 to either its plus or minus position. The terminals of this double-pole double-throw (dpdt) switch are tied to both the negative 150-volt output (from V709) and the positive 150-volt output (from V704-V705) for reference. Circuit operation is as follows:

(1) The high side of variable resistor R762B is connected to the +150-volt output of rectifiers V704 and V705. The low side of R762B is connected to chassis ground. When POLARITY switch S709 is set to its + position, the variable arm of R762B has a path of continuity to the negative 300-volt output from the cathode of regulator V707. This circuit arrangement can produce a total usable output which is the sum of +150-volts to chassis ground, and the potential difference from chassis ground to -300-volts. The total potential which can be obtained across this network is 450-volts. A variation of 150-volts is obtained by rotating the arm of IMPULSE GEN LEVEL SET control R762. The setting of the potentiometer determines the charging voltage, applied through the 10-db step coarse attenuator control S708 to impulse generator G701. During calibration of the equipment, the variable arm of R762 is set so that the output amplitude from impulse generator G701 is equivalent to the output from an external impulse

generator which functions as a standard for calibrating purposes.

(2) The high side of variable resistor R762A is connected to the -150-volt output of regulator V709. The low side of R762A is connected to chassis ground. When POLARITY switch S709 is set to its minus (-) position, the variable arm of R762A will be connected to the positive 300-volt output at the plate of voltage regulator V706. The circuit arrangement is similar to that described in (1) above, but is of opposite polarity. A total usable output of 450-volts can be obtained by adding the -150-volts (from the high side of R762A to chassis ground) to the +300-volts (from chassis ground to the positive output of V706 and V707). A variation of 150-volts is obtained by rotating the arm of IMPULSE GEN LEVEL SET control R762. The setting of the potentiometer determines the charging voltage, applied through 10-db step coarse attenuator control S708 to impulse generator G701 ((1) above).

(3) The positive and negative positions of POLARITY switch S709 are provided so that the effects of either positive or negative output pulses from impulse generator G701 can be observed when performing noise measurements.

16. Audio Amplifier, Stage Analysis (fig. 7)

Audio amplifier V701 is a dual triode, which receives its input signal from audio detector V1 in the electrometer assembly (fig. 1) and delivers its output signal to one or two headsets. The two sections of V701 function as two separate amplifiers, as described below.

a. First Audio Amplifier V701A. The audio voltage at terminal A1 of connector J701 is applied to the grid resistor, which consists of VOLUME control R701, through a shielded cable. When the meter is used as the indicating device for the signal under measurement, the full output of the audio detector in the electrometer assembly is applied to the first audio amplifier. When the slideback technique of operation is used (para 22), the setting of the SLIDEBACK control applies a negative bias to the plate of the audio detector stage. Under this condition, only the peaks of the signal under measurement, with an amplitude higher than the detection level set by the SLIDEBACK control, will be heard in the

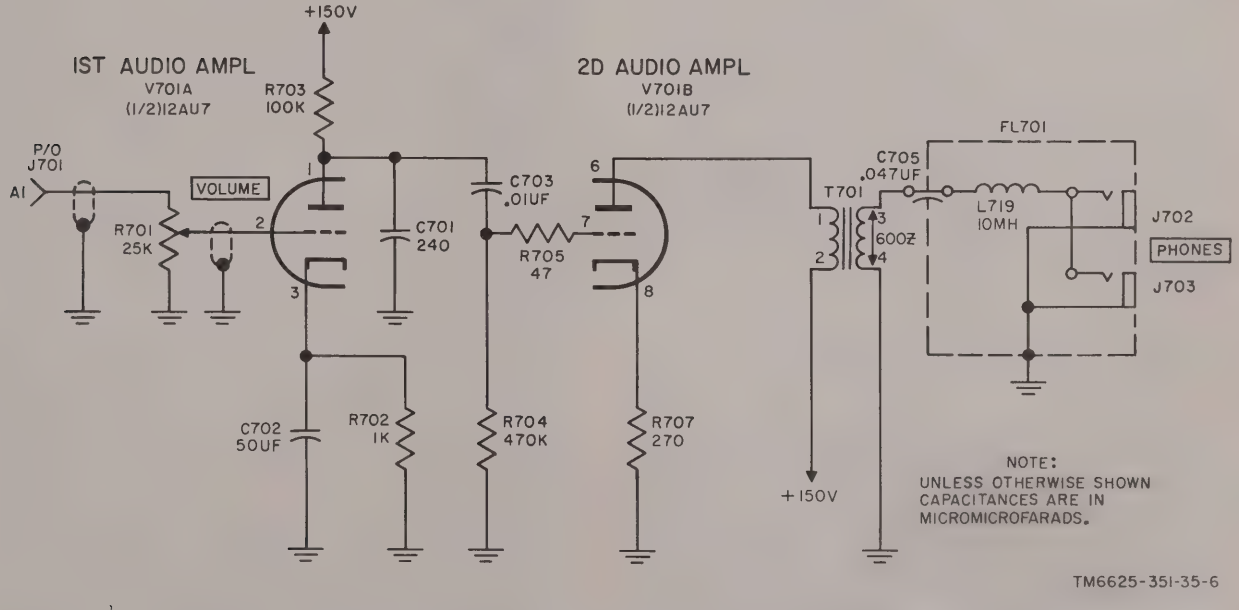

Figure 7. Audio amplifiers V701A and V701B, simplified schematic diagram.

headset. Depending on the position of the arm of the VOLUME control, all or part of the audio voltage is applied to the control grid, pin 2, of V701A. Cathode bias is developed across resistor R702, which is bypassed by capacitor C702. The signal voltage is developed across plate load resistor R703, which is connected to the +150-volt output of the power supply. Capacitor C701 serves to bypass any if. component which may still be present in the input signal. Capacitor C703 couples the amplified output from the plate, pin 1, of V701A to the input of the second audio amplifier.

b. Second Audio Amplifier V701B. The amplified audio voltage coupled through capacitor C703 and parasitic suppressor R705 is developed across grid resistor R704. Cathode bias is provided by the voltage drop across unbypassed cathode resistor R707. Plate voltage for V701B is supplied from the +150-volt supply through the primary winding, terminals 1 and 2, of output transformer T701. The amplified audio voltage from the plate, pin 6, of V701B is coupled to transformer T701. Audiofrequencies within the range from 150- to 5,000-cps, flat within 8-db of the 1,000-cps amplitude, are transformer-coupled by the secondary winding, terminals 3 and 4, to the input of rf filter FL701. The filter circuit, which consists of feedthrough capacitor C705 and rf coil L719, prevents rf signals which may be picked up by the headsets or the headset cords from entering the test set. Two PHONE jacks, which are integral parts of filter FL701, permit connecting one or two headsets to the final output signal from audio amplifier V701B.

17. Meter Cathode Follower V702 and Metering Circuit, Stage Analysis (fig. 8)

a. General. Cathode follower V702 is a dual triode which is connected as a bridge-type amplifier (B, fig. 8) to provide drive for the panel-mounted meter and for either a recorder or the remote meter, when connected to RECORDER EXT METER jack J704. The dc input voltages to sections A and B of the bridge-type amplifier are derived from meter detector V2 and high-impedance electrometer stages V3 and V4 (para 32) which are housed within the sealed assembly of each tuning unit (fig. 1). In the static condition of the bridge amplifier, R715 is adjusted so that the potential at C and D are equal, and no current flows through the metering circuit (0 MICROVOLTS). When signals (negative voltages) are applied to the grids of electrometer tubes V3 and V4 (fig. 19), the negative going outputs taken from the cathodes are applied to the grids of V702A and V702B respectively. Negative going voltages on the grids of V702A and V702B cause the dc plate resistance of each triode to increase. Meter detector tube V2 and electrometer tubes V3 and V4 are arranged in a signal voltage-divider circuit so that V702A receives one-third more signal voltage than V702B. Therefore, the dc plate resistance of V702A increases more than that of V702B. This will cause point C to become negative with respect to point D and current will flow through the metering circuit.

b. Cathode Follower V702 (A, fig. 8). The two sections of cathode follower V702 are connected in a nearly symmetrical circuit. In the cathode circuit, one resistor (R712) for V702A is fixed; the corresponding resistor (R715) for V702B is variable. In this manner, the voltages across the bridge circuit can be equalized by adjusting ZERO ADJ control R715 in the absence of an incoming signal. Fixed resistors R712 and R713 serve as the cathode load resistor, connected to the -150-volt output of the power supply, for V702A. Resistors R714 and R715 function identically in the corresponding circuit for V702B.

(1) *Grid circuits.* Resistor R719 is the grid return for V702A; an identical value resistor, R718, is the grid return for V702B. Since both the grid return resistors and the cathode resistors are connected to the -150-volt output of the power supply, the bias voltage for each section of V702 is determined by the current flowing through their

respective load resistors, R712, R713, R714 and R715.

(2) *Plate circuits.* The plates of each section of cathode follower V702 are directly connected to the +150-volt output of the power supply.

(3) *Detailed circuit description.* Since a detailed circuit description of the cathode follower depends on the position of function switch S702, the description of current flow in the metering circuit is covered in the following paragraphs of function switch operation.

18. CW AVERAGE Position of Function Switch (fig. 8)

The following subparagraphs describe the circuit conditions for the CW AVERAGE position of function switch S702. Figure 8 shows that the output of cathode follower V702A is developed across load resistor R712 and cathode-bias resistor R713. With SIGNAL ATTENUATOR DB wafer switch S701 in any position except 0 CW ONLY, the signal is coupled through meter multiplier resistor R722 to terminal 2 of function switch S702 (rear). In the 0 CW ONLY position of S701, resistor R722 is bypassed by the wiper and terminal 2 of the switch; the meter is then 10-db more sensitive than in any other position of S701 (para 12c). The various sections of function switch S702 provide a path of continuity for the metering signal as follows:

a. S702 Rear, Section X. Contact is made between terminals 2 and 3 so that the metering signal has a path of continuity through rf filter FL702. This filter houses feedthrough capacitors C706 and C707, rf coils L720 and L721, and fixed resistor R725. Resistor R725 functions as a meter multiplier with no phone plug inserted into RECORDER EXT METER jack J704. The insertion of a phone plug into jack J704 removes R725 from the metering signal path and substitutes the internal resistance of either the remote meter or a recording meter (depending on the device used at the remote site) into the meter multiplier circuit. The metering signal is coupled to the negative terminal of M701 and continues through the meter movement to the positive terminal of M701.

b. S702 Front, Section Y. Contact is made between terminals 1 and 2 so that the metering signal has a path of continuity through IF. CATHODE FOLLOWER ADJ switch S704, which normally is closed. Switch S704 is provided as a chassis adjustment control for peaking the if. cathode follower stages in the if. amplifiers of turning units 2, 3, and 4. (There is no if. cathode follower in tuning unit 1.) Fixed resistor R717 is inserted in the meter path as an additional meter multiplier with the switch in its open position. An additional meter multiplier is necessary because adjustment of the peaking coils in the if. cathode followers of tuning units 2, 3, and 4 requires overdriving the meter beyond its full-scale indication. Capacitor C708 damps the meter movement when METER DAMP switch S703 is thrown to its ON position or held in its MOM position. This switch, which provides an ac path through capacitor C708 and resistor R723 across the meter terminals, is used when low-signal levels cause erratic meter pointer fluctuations. The metering signal has a return path fo the +150-volt power supply through the normally closed contacts of switch S704, fixed resistor R716, ZERO ADJ control R715, and V702B.

c. S702 Front, Section Z. Contact is made between terminals 2 and 3 only in the CW AVERAGE position of the function switch. Under this condition, the 6.3-volt ac output from the power supply passes through feedthrough capacitor C751 and rf coil L711 in the filter box, to terminal 18 of main unit receptacle J701. The mating plug at the rear of the tuning unit applies this 6.3-volt ac potential to the heaters of two thermal relays in the detector and electrometer assembly. The load impedance of the two detectors in the electrometer assembly is reduced with the heaters of the relays energized. This action is equivalent to lowering the time-constant in the detector charging circuit. The purpose of this circuit is to enable the electrometers to measure the average envelope

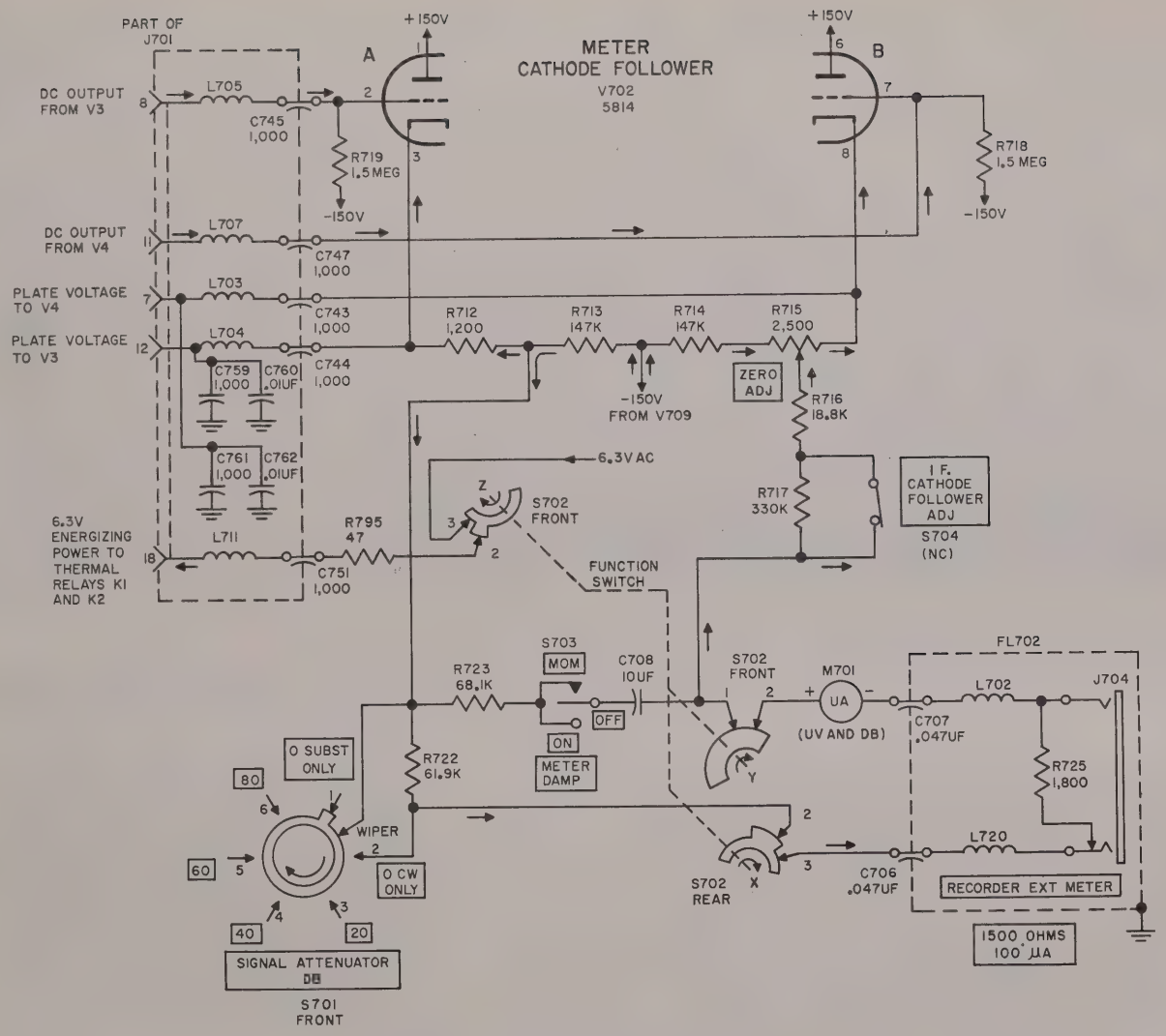

A. METER CATHODE FOLLOWER.

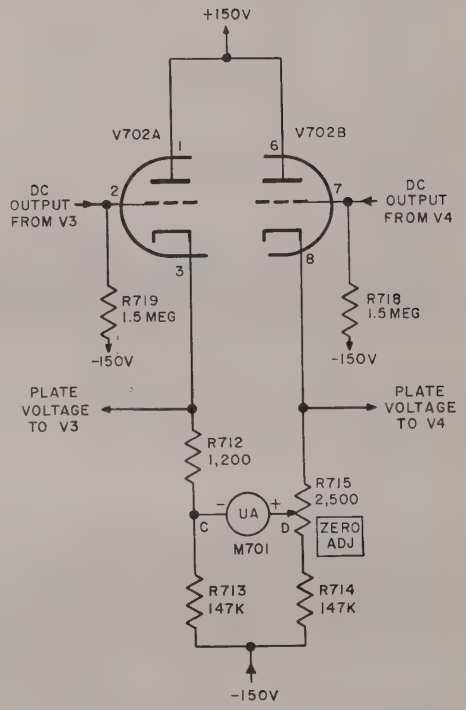

B. SIMPLIFIED BRIDGE AMPLIFIER

NOTES:

1. UNLESS OTHERWISE INDICATED; RESISTANCE VALUES ARE IN OHMS, CAPACITANCE VALUES ARE IN MICROMICROFARADS.
2. ⟶ DESIGNATES SIGNAL PATH.

TM6625-351-35-7

Figure 8. Cathode follower and meter circuit, CW AVERAGE position of function switch.

(instead of the peak) of narrow-head cw or modulated cw signals.

19. CW PEAK Position of Function Switch (fig. 9)

Figure 9 shows that the signal path with function switch S702 in CW PEAK position is similar to that in CW AVERAGE position (para 18) except for the following differences:

a. S702 Rear, Section X. The switch wafer has been rotated 30° clockwise, but contact between terminals 2 and 3 continues to exist. Therefore, the signal path from multiplier resistor R722 to the negative terminal of meter M701 is identical with that described in paragraph 18*a*.

b. S702 Front, Section Y. The switch wafer has been rotated 30° clockwise, but contact between terminals 1 and 2 continues to exist. Therefore, the signal path from the positive terminal of meter M701 to the cathode of V702B and the positive source in the power supply is identical with that described in paragraph 18*b*.

c. S702 Front, Section Z. The switch wafer has been rotated 30° clockwise, breaking contact between terminals 2 and 3. Under this condition, 6.3 volts ac heater power is disconnected from terminal 18 of main unit receptacle J701 and its mating terminal 18 on the tuning unit connector. This action deenergizes the two thermal relays in the detector-electrometer assembly (fig. 19), and restores the extremely high load impedance and long time-constant charging circuit in the plate of the meter detector. The purpose of this circuit is to enable the electrometers to measure the peak voltage (instead of the average envelope value) of narrow-band cw or modulated cw signals.

Note: Since the thermal relays are also deenergized in the ZERO ADJ, PULSE PEAK, and METERED SLIDEBACK positions of the function switch, the following paragraphs (20 through 22) do not include the repetitive description of the thermal relay circuit action.

20. ZERO ADJ Position of Function Switch (fig. 10)

Figure 10 shows that the output of cathode follower V702A no longer has a path of continuity through terminals 2 and 3 of switch S702 (rear). The various sections of the function switch permit zeroing the meter indication, in the absence of an incoming meter signal as follows:

a. S702 Rear, Section X. The switch wafer has been rotated 60° clockwise from its original CW AVERAGE position. The long tab on the switch wafer now creates a path of continuity between terminals 3 and 4. The signal path no longer is through multiplier resistor R722 because the output side of R722 has an open circuit at terminal 2 of S702 (rear). Instead, a new signal path exists through two multiplier resistors, R723 and R724, terminals 3 and 4 of S702 (rear), and filter FL702, to the negative terminal of meter M701.

b. S702 Front, Section Y. The switch wafer has been rotated 60° clockwise from its original CW AVERAGE position, but contact between terminals 1 and 2 continues to exist. Therefore, the signal path from the positive terminal of meter M701 to the cathode of V702B and the positive source in the power supply is identical with that described in paragraph 18*b*. Under quiescent conditions of cathode follower V702 (*d* below), the variable arm of front-panel ZERO ADJ control R715 can be varied to equalize the voltage across the metering circuit. Balance is obtained when panel-mounted meter M701 indicates a zero indication on the lower meter scale, which is calibrated in MICROVOLTS.

c. S702 Front, Section Z. The switch wafer has been rotated 60° clockwise from its original CW AVERAGE position. The contact between terminals 1 and 3 remains broken. The circuit action is identical with that described for the CW PEAK position (para 19*c*).

d. S702 Rear, Section W. For the first time in the circuit description, section W of S702 performs a function. In the two previous positions (CW AVERAGE and CW PEAK), section W presented an open circuit to the switch terminals. In the ZERO ADJ position of the function switch, terminals 3 and 4 create a path of continuity from the -150-volt output of the power supply to terminal 1 of main unit receptacle

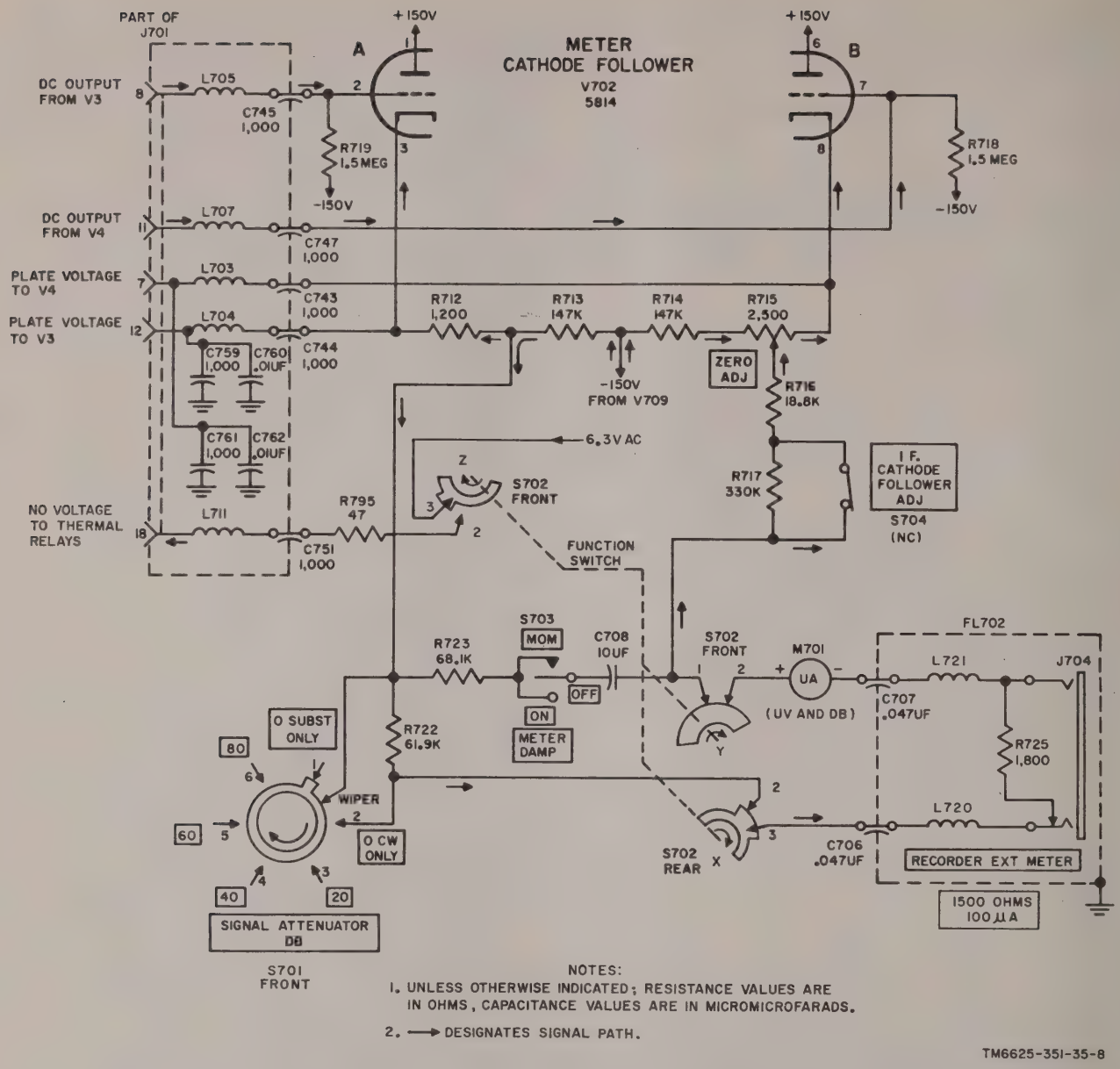

Figure 9. Cathode follower and meter circuit, CW PEAK position of function switch.

J701. With a tuning unit plugged into the main unit, terminal 1 of the mating connector on the tuning unit couples this -150-volt potential (with reference to chassis ground) to the if. amplifier bus. Fixed resistor R708 is shorted out of the circuit by terminal 3 of the switch, and permits the full output of voltage regulator V709, in the negative power supply, to be applied to the if. bias bus. A high negative voltage is developed in the if. bias bus which cuts off the complete if. amplifier, and assures that no metering signal can pass through meter cathode follower V702 while equalizing the voltage across the metering circuit with ZERO ADJ control R715.

21. PULSE PEAK Position of Function Switch
(fig. 11)

Figure 11 shows that the signal path with function switch S702 in PULSE PEAK position is similar to that in ZERO ADJ position (para 20), except for the following differences:

a. S702 Rear, Section X. The switch

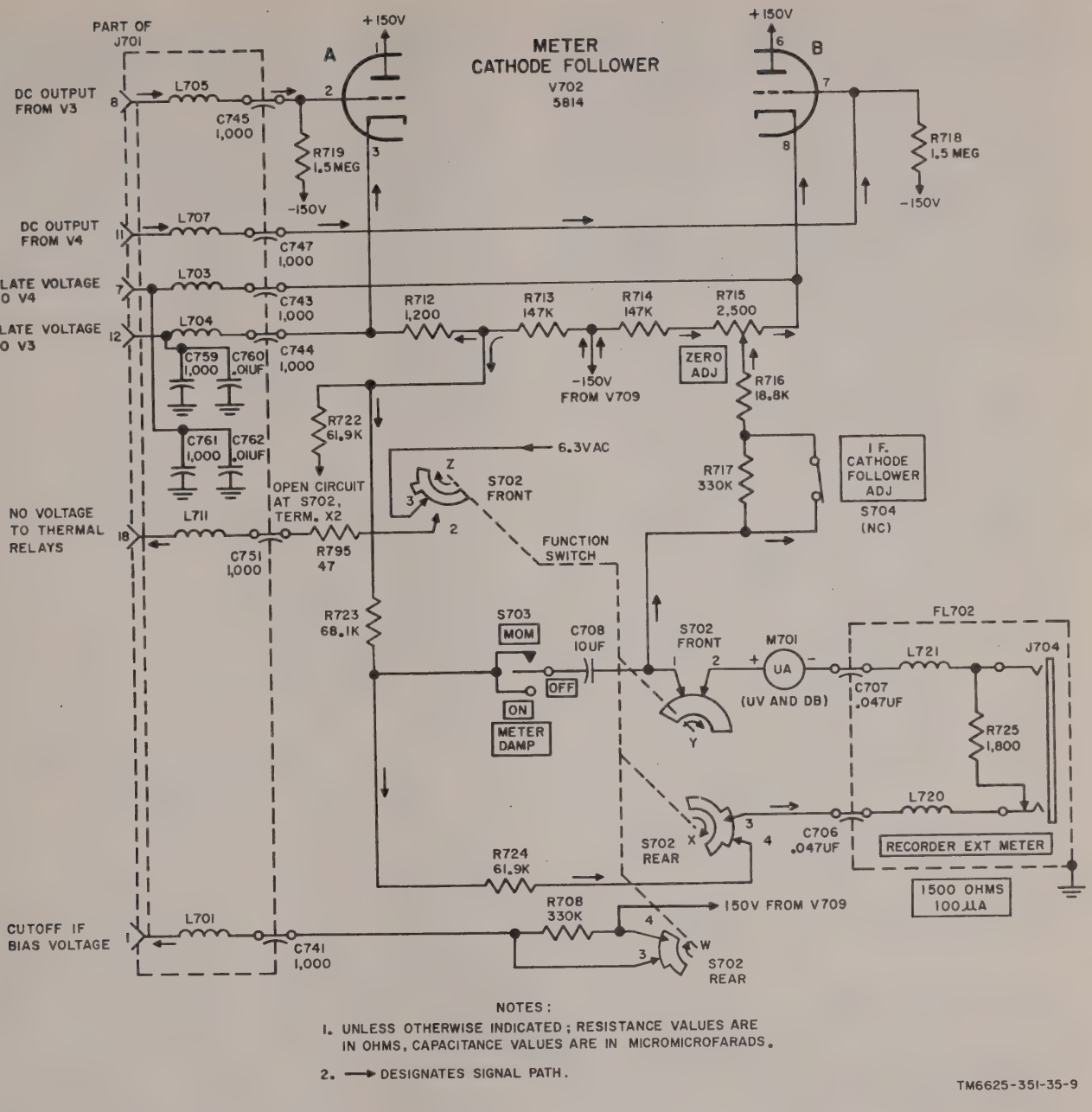

Figure 10. Cathode follower and meter circuit, ZERO ADJ position of function switch.

wafer has been rotated 90° clockwise from its original CW AVERAGE position. The long tab on the switch wafer continues to create a path of continuity for the output of cathode follower between terminals 3 and 4. The signal path for V702A cathode is through multiplier resistors R723 and R724, instead of through single multiplier R722. This increase in resistance value of the multiplier circuit was of little significance in the ZERO ADJ position of the function switch, because only the equalizing voltage across the metering circuit was of interest. With the function switch in PULSE PEAK position, however, it is important to note the value of resistance in the meter multiplier path. The combined value of multiplier resistors R723 and R724 is approximately twice the value of multiplier resistor R722. Therefore, the meter is approximately 6 db less sensitive in PULSE PEAK position than in

CW PEAK position. This loss in meter sensitivity is taken into account in the design of the instrument. The dc signal from the series multiplier resistors is coupled through S702 (rear (terminals 3 and 4)) and filter FL702 to the negative terminal of meter M701.

b. S702 Front, Section Y. The switch wafer has been rotated 90° clockwise from its original CW AVERAGE position, but contact between terminals 1 and 2 continues to exist. Therefore, the signal path from the positive terminal of meter M701 to the cathode of V702B and the positive source in the power supply is identical with that described in paragraph 18*b*.

c. S702 Front, Section Z. The switch wafer has been rotated 90° clockwise from its original CW AVERAGE position. The contact between terminals 2 and 3 remains

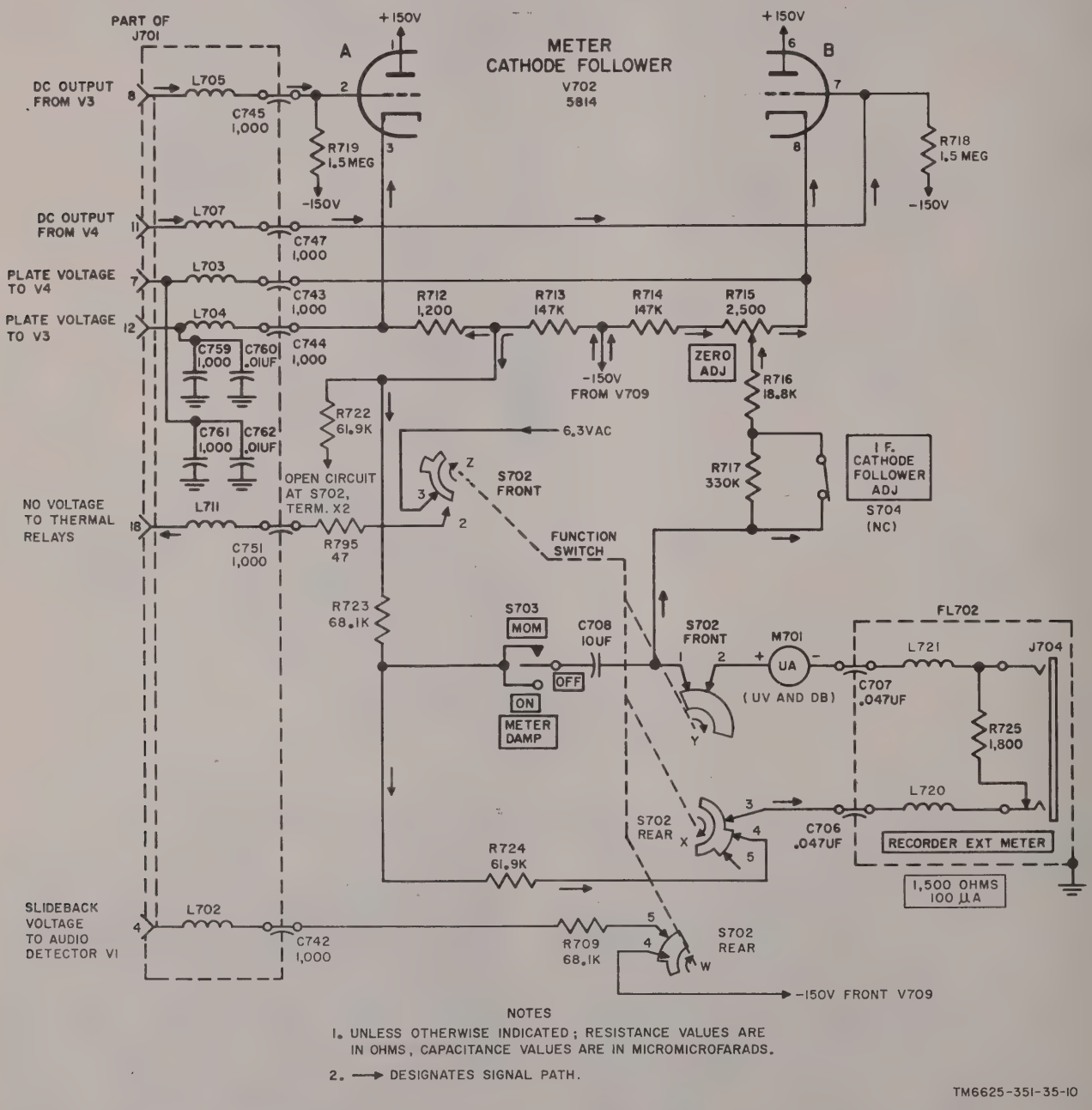

NOTES

1. UNLESS OTHERWISE INDICATED; RESISTANCE VALUES ARE IN OHMS, CAPACITANCE VALUES ARE IN MICROMICROFARADS.
2. ⟶ DESIGNATES SIGNAL PATH.

TM6625-351-35-10

Figure 11. Cathode follower and meter circuit, PULSE PEAK position of function switch.

broken. The circuit action is identical with that described for the CW PEAK position (para 19c).

d. S702 Rear, Section W. The switch wafer has been rotated 90° clockwise from its original CW AVERAGE position, which results in two circuit actions:

(1) Contact is broken between terminals 3 and 4. In the ZERO ADJ position, the full -150-volt output of voltage regulator V709 was used to block the signal path at the input to the if. amplifier (in the tuning unit). With S702 rotated to the PULSE PEAK position, this if. amplifier cutoff bias is reduced, and the normal bias voltage circuit is restored (para 29a). Signal voltages introduced into the if. amplifier are now amplified, detected, and coupled to meter cathode follower V702 to produce an indication on meter M701.

(2) Simultaneously, contact is made between terminals 4 and 5. The -150-volt output from voltage regulator V709 now has a path of continuity through dropping resistor R709, feedthrough capacitor C742, and filter choke L702, to terminal 4 of main unit receptacle J701. With a tuning unit plugged into the main unit, mating terminal 4 on the tuning unit connector applies a portion of the negative 150-volt output as back bias to the plate of audio detector V1, in the detector-electrometer circuit. The setting of the front-panel SLIDEBACK control determines the specific bias voltage applied to the audio detector. Under this condition, background noise is removed and only those peaks of the noise (broadband) signals which are greater in amplitude than the bias level set by the SLIDEBACK control are monitored in headsets, when connected to the main unit PHONES jack.

22. METERED SLIDEBACK Position of Function Switch (fig. 12)

Figure 12 shows that the METERED SLIDEBACK position of the function switch disconnects the dc output at V702A cathode (pin 3) from the minus terminal of the meter. Instead of indicating signal amplitude, the meter now indicates that negative voltage which is required to set the signal level from audio detector V1 at the threshold of audibility. The various sections of S702 accomplish this action as follows:

a. S702 Rear, Section X. The switch wafer has been rotated 120° clockwise from its original CW AVERAGE position. The long tab on the switch wafer creates a new path of continuity for the potential set up across the SLIDEBACK control (in the tuning unit) between terminals 3 and 6. Simultaneously, the dc signal path from meter multiplier resistors R723 and R724 is open-circuited at the input to the meter, since terminal 4 of S702X has no path of continuity. Therefore, the negative terminal of the meter is connected through rf filter FL702, dropping resistor R709, feedthrough capacitor C742, rf choke L702, and contact 4 of receptacle J701 and its mating connector on the tuning unit, to the negative voltage determined by the setting of the variable arm of the SLIDEBACK control.

b. S702 Front, Section Y. The switch wafer has been rotated 120° clockwise from its original CW AVERAGE position. For the first time in the circuit description, contact is broken between terminals 1 and 2, and the dc return path to meter cathode follower V702 is effectively disconnected. A new path of continuity has been created between terminals 2 and 6; this path places the positive terminal of meter M701 at chassis ground potential. Therefore, the meter indication shows the amplitude of slideback bias (in db above 1 microvolt/mc) required to obtain the threshold level of audibility of a detected signal.

c. S702 Front, Section Z. The switch

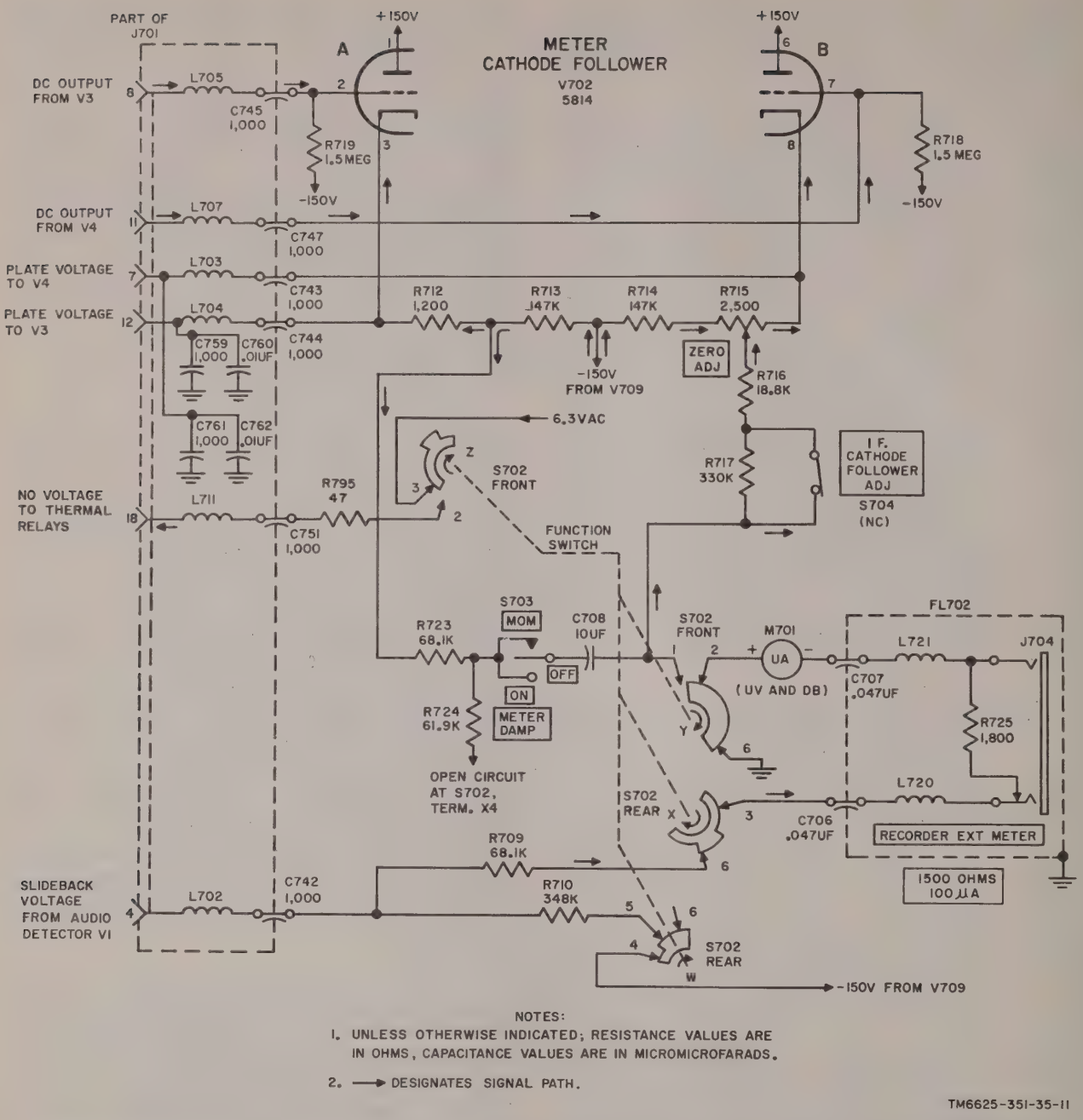

Figure 12. Cathode follower and meter circuit, METERED SLIDEBACK position of function switch.

wafer has been rotated 120° clockwise from its original CW AVERAGE position. The contact between terminals 2 and 3 remains broken. Circuit action is identical with that described for the CW PEAK position (para 19*a*).

d. S702 Rear, Section W. The switch wafer has been rotated 120° clockwise from its original CW AVERAGE position, which results in two circuit actions:

(1) Contact continues to be made between terminals 4 and 5. Therefore, the -150-volt output from voltage regulator V709 has a path of continuity through voltage-divider resistor R710 and the SLIDEBACK control to chassis ground. Feedthrough capacitor C742, rf choke L702, terminal 4 of receptacle J701, and its mating

terminal on the tuning unit connector are filter and interconnecting points in this dc potential path.

(2) The potential present at the junction of the SLIDEBACK control (in the tuning unit) and voltage-divider resistor R710 is coupled through resistor R709, wafer switch S702 rear, section X, and filter FL702 to the negative terminal of the meter. In the METERED SLIDEBACK position of the function switch, R709 serves as the new meter multiplier resistor.

23. Impulse Generator Circuit (fig. 13)

The impulse generator circuit consists of repetition rate generator V703A, impulse generator driver V703B, and impulse generator G701. A detailed description of these circuits is given in the following subparagraphs.

a. Repetition Rate Generator V703A. The repetition rate generator is one section of a dual triode, which functions as a self-excited phase-shift oscillator that produces a basic frequency of approximately 70-cps. The output from this oscillator is used as the input to impulse generator driver stage V703B.

(1) *Plate circuit.* The plate, pin 6, of V703A receives B+ potential through voltage-dropping resistor R728 and the ON position of switch S705. B+ potential is removed from the plate of the stage when S705 is set to the OFF position. Resistors R726 and R727 function as bleeders for the +150-volt output from the power supply, in the OFF position of the switch.

(2) *Cathode circuit.* Resistor R734, bypassed by capacitor C715, develops the cathode bias for the stage. The B+ potential at the junction of the plate, pin 6, and dropping resistor R728, is blocked from reaching the grid, pin 7, by capacitor C711. Therefore, V703A operates as a self-biased stage.

(3) *Grid circuit.* A frequency-determining network, which consists of resistors R730, R731, and R732

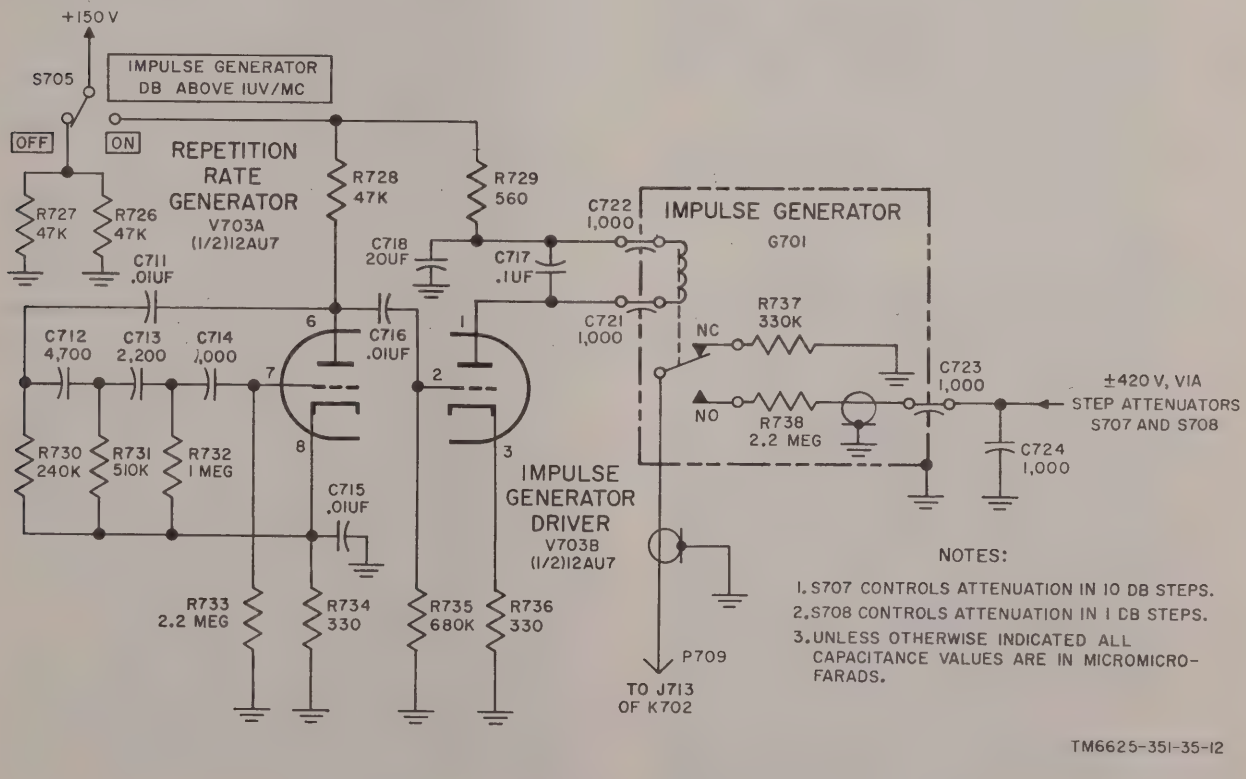

Figure 13. Impulse generator circuit, simplified schematic diagram.

(in series with R734 to ground) and capacitors C712, C713, and C714, is connected in the grid-to-cathode circuit. Resistor R733 functions as the grid return.

(4) *Dynamic circuit description.* With S705 in its ON position, regenerative voltage is coupled from the plate, pin 6, of V703A to the grid, pin 7, through capacitor C711 and the frequency-determining network. The values of the frequency-determining elements are chosen so that the regenerative voltage will be in phase with the grid voltage at approximately 70 cycles. The oscillatory output at the plate, pin 6, is coupled through capacitor C716 to the input of impulse generator driver V703B.

b. Impulse Generator Driver Stage V703B. This section of the dual triode serves as a driver for the coil of impulse generator G701 and as a power amplifier.

(1) *Plate circuit.* The plate, pin 1, of V703B receives B+ potential through the solenoid coil of G701 and voltage-dropping resistor R729, with IMPULSE GENERATOR DB ABOVE 1 μV/MC switch S705 in the ON position.

(2) *Cathode circuit.* The voltage drop across cathode resistor R736, at pin 3 of the tube, develops cathode bias.

(3) *Grid circuit.* High value resistor R735, connected between pin 2 of the tube and chassis ground, is the grid return.

(4) *Dynamic circuit description.* The 70-cps voltage from V703A is applied to the control grid, pin 2, of V703B. The solenoid coil of impulse generator G701, shunted by capacitor C717, forms the plate load. Capacitor C718 and resistor R729 form a plate decoupling network. Feedthrough capacitors C721 and C722 bypass transients developed by the impulse generator mercury switch contacts. The changes in current through the coil operates a mercury switch within G701, which generates the 70-cps calibrating voltage by charging and discharging a length of coaxial cable that functions as a delay line.

c. Impulse Generator G701. This assembly consists of a coil (*b* above) which surrounds a mercury switch, a coaxial delay line in series with current-limiting resistor R738, and discharge path resistor R737. Circuit action is described below.

(1) The coil surrounding the mercury switch is part of the plate load of impulse generator driver stage V703B. The 70-cps voltage developed across the coil operates the moving contact at a 70-cps rate. With the contact at its normally open (NO) position, the coaxial delay line is connected through current-limiting resistor R738 and feedthrough capacitor C723 to a B+ voltage determined by the settings of the series-connected impulse generator step attenuators S707 and S708. This B+ voltage can be as high as 450 volts, positive or negative with respect to chassis ground, depending on the position of chassis control POLARITY switch S709 (fig. 6).

(2) With the contact at its normally closed (NC) position, the coaxial delay line is discharged to ground through resistor R737. The transient discharge of the dc voltage on the delay line produces a broadband signal whose frequency spectrum is flat, within one-half db, from 150 kc to 1,000 mc. This spectrum corresponds with the frequency coverage of the test set and creates a usable source of calibrating voltage which requires no tuning of circuit elements.

(3) The transient discharge of the coaxial delay line is dc-coupled through output connector P709 to input jack J713 on coaxial relay K702 (fig. 14).

24. Coaxial Relays and Attenuators (fig. 14)

Figure 14 shows that a network of coaxial relays and attenuators are connected to the rf signal input and to the impulse generator output signal paths. The direction of signal flow depends on the setting of calibration switch S706. The following subparagraphs analyze the circuit with S706 in the SERIES CAL & OPERATE position (*a* below); then with S706 in the SHUNT CAL position (*b* below).

a. SERIES CAL & OPERATE Position. Two signal paths are provided by coaxial relays K701 and K702.

(1) *Rf signal path.* The rf signal is applied to SIGNAL INPUT jack J705 and is conducted through adapter CP701 to input jack J707 on coaxial relay K701. Setting calibration switch S706 in the SERIES CAL & OPERATE position creates a path of continuity for the +6-volt output of the power supply through the coil of relay K701 and current-limiting resistors R739-R740 to chassis ground. With relay K701 energized, the movable arm on the lower set of contacts connects the incoming rf signal applied at jack J707 on relay K701 to jack J709. The movable arm on the upper set of contacts grounds the output end of a 20-db fixed attenuator AT701, effectively removing it from the circuit. The rf signal available at output jack J709 on the coaxial relay is applied through plug P703, cable assembly W701, and plug P704 to coaxial jack J718 on the input side of the turret-type rotary switch on signal attenuator AT702. When the SIGNAL ATTENUATOR db control is rotated to the 0 CW ONLY position (fig. 14), a 10-db resistive T-pad attenuator network of coaxial structure is inserted in the signal path. The attenuated rf signal, available at the output end of the coaxial structure, is picked up by the output side of the turret-type rotary switch and is coupled through coaxial jack J719 and right-angle adapter CP705. Mating plug P712 conducts the attenuated rf signal through a length of coaxial cable to terminal A2 of main unit multipin connector J701. The corresponding terminal A2 on the mating plug (at the rear of each tuning unit) couples the signal to the rf tuner section of the tuning unit in use.

Note: When the SIGNAL ATTENUATOR DB control is rotated to the 0 SUBST ONLY position, a straight-through conductor coaxial structure is inserted in the signal path and no attenuation is introduced. With this control rotated to the 20, 40, 60, and 80 positions, a 10-, 20-, 40-, or 60-db T-pad coaxial structure is respectively inserted in the rf signal path. The remaining part of the front-panel designated amount of signal amplitude reduction is obtained by the insertion of 10 or 20 db additional attenuation in the if. signal path (para 12*b*).

(2) *Impulse generator signal path.* The output of impulse generator G701 is coupled through plug P709 and mating jack J713 on coaxial relay K702. The coil of relay K702 is deenergized when calibration switch S706 is set to the position shown in figure 14. Therefore, the movable arm on the lower set of contacts provides a path of continuity through adapter CP704 to front-panel IMPULSE OUTPUT jack J717. The movable arm on the upper set of contacts grounds the input end of 20-db fixed attenuator AT701, effectively removing it from the circuit. When the discone, loop, or vertical antenna is connected to the main unit, one of the pair of rf cables in Electrical Cable Assembly Set MX-3410/URM-85 mates with the output of the impulse generator at IMPULSE OUTPUT jack J717. Each of these three antennas, with the use of the series method of calibration (fig. 3), houses a self-contained 20-db attenuator.

b. SHUNT CAL Position. The circuit conditions with calibration switch S706 in

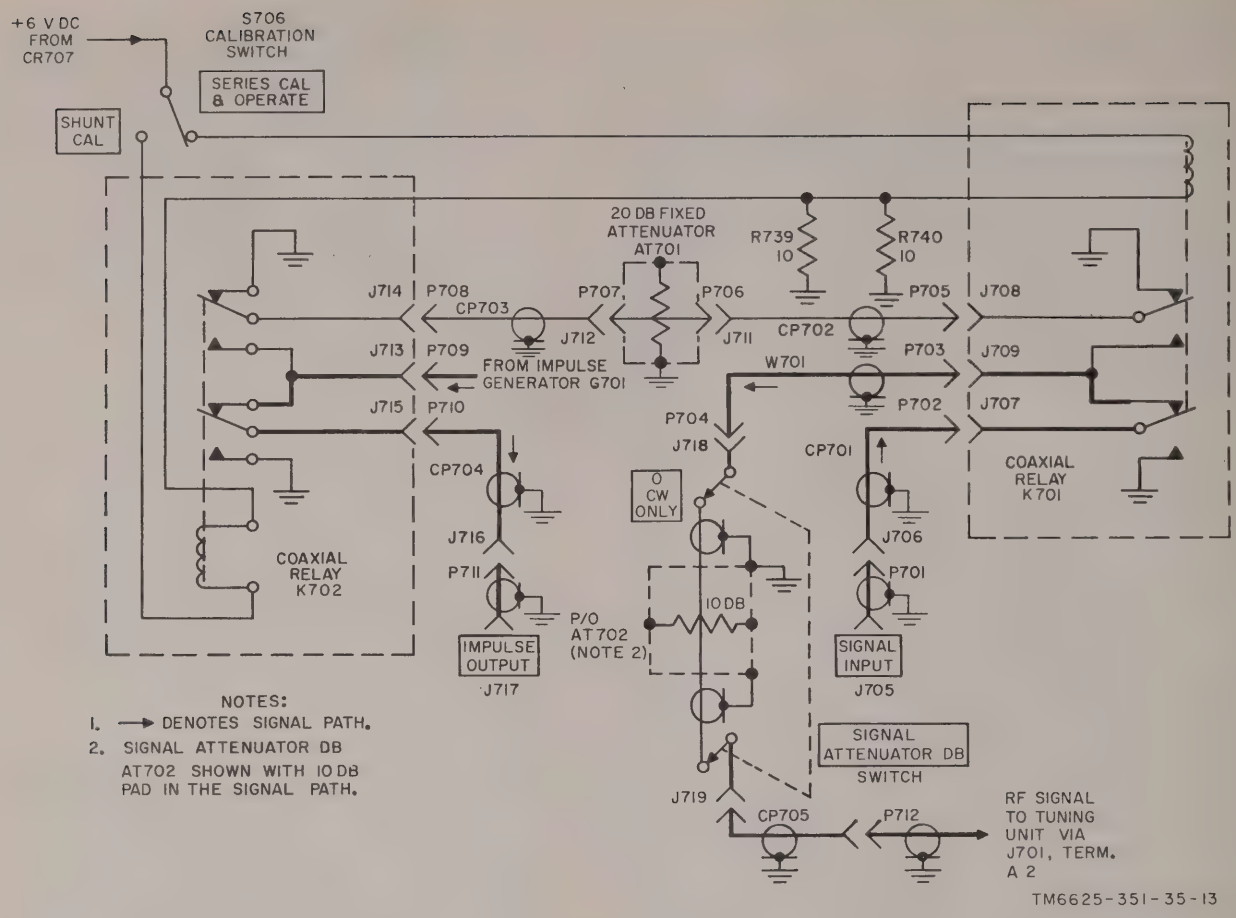

Figure 14. Coaxial relays and attenuators, simplified schematic diagram.

SHUNT CAL position are the following:

(1) *Rf signal path.* The rf signal connected to SIGNAL INPUT jack J705 is conducted through right-angle adapter CP701 to jack J707 on coaxial relay K701. The coil of relay K701 is deenergized when calibration switch S706 is set to SHUNT CAL position. Therefore, the movable arm on the lower set of contacts provides a short circuit to chassis ground for the incoming rf signal.

(2) *Impulse generator signal path.* The output of impulse generator G701 is applied through plug P709 and mating jack J713 on coaxial relay K702. Since the coil of relay K702 is energized in the SHUNT CAL position of S706, the movable arm on the upper set of contacts creates a path of continuity for the impulse generator signal through jack J714 and adapter CP703 to the input of 20-db fixed attenuator AT701. The calibrating signal is attenuated by 20 db and is coupled through adapter CP702 to mating jack J708 on relay K701.

(a) The movable arm on the upper set of contacts of K701 (now deenergized) couples the attenuated impulse generator calibrating voltage from jack J708 through jack J709 and cable assembly W701 to signal attenuator AT702. The signal path from AT702 is identical with that described in paragraph *a*(1) above.

(b) Figure 14 shows that the movable arm on the lower set of contacts of relay K702 (now energized) applies chassis ground potential through adapter CP704 to IMPULSE OUTPUT jack J717. This circuit condition insures that the

calibrating signal path cannot be disturbed by any rf potential which may be present at the front-panel IMPULSE OUTPUT jack.

Section III. THEORY OF TUNING UNIT 1

25. Block Diagram of Tuning Unit 1 (fig. 15)

The block diagram for tuning unit 1 is shown in figure 15. For complete circuit details, refer to the schematic diagram, figure 99.

a. Six-Position Turret Tuner. The six-position turret tuner receives the rf signal from the main unit, and provides appropriate tuned circuits for any of the six rf bands selected by MEGACYCLES band switch S1. The rf signal is then coupled to the rf amplifier.

b. Rf Amplifier Stage, V1. The rf amplifier stage, V1, amplifies the signal and couples it to mixer stage V2. The front-panel TUNING control tracks the rf amplifier and mixer tuned circuits with the output of the oscillator.

c. Oscillator, V3. Oscillator V3 generates a signal which is 455 kc higher than the incoming rf signal for bands 1 and 3 (para 26), or 1,600 kc higher than the incoming rf signal for bands 2, 4, 5, and 6. This signal is injected into mixer stage V2.

d. Mixer Stage V2. Mixer stage V2 heterodynes the incoming rf signal from rf amplifier with the oscillator frequency, and produces an output difference frequency. This difference frequency, which may be either 455 kc or 1,600 kc, depending on the band selected by the setting of the MEGACYCLES band switch, is coupled to the if. input selector.

e. If. Input Selector. The if. input selector allows for automatic relay-operated selection of either the 455-kc or the 1,600 kc output from the mixer stage. The proper signal path for the selected if. signal is completed together with a second relay housed in if. step attenuator AT1.

f. If. Step Attenuator AT1. If. step attenuator AT1 is a ladder network which provides an inherent 6-db loss in the signal path, before the signal enters the if.

g. 1,600-Kc If. Amplifier. The 1,600-kc if. amplifier consists of four cascaded double-tuned if. amplifier stages: V4, V5, V6, and V7. These stages provide additional gain and selectivity for the 1,600-kc if. signal. To vary the signal amplification, a front-panel GAIN control is provided.

h. 455-Kc If. Amplifier. The 455-kc if. amplifier is similar to the 1,600 kc, except that its center operating frequency is 455 kc, instead of 1,600 kc. It also has four separate stages: V8, V9, V10, and V11. The front-panel GAIN control, which varies the signal amplification, is common with the 1,600-kc if. amplifier.

i. If. Output Selector. The if. output selector is a relay-operated switch which allows the output from the if. amplifier in use to be coupled to the detector and electrometer assembly, A1. Selection of the proper relay-energizing voltage is automatic, depending on the position of the MEGACYCLES band switch S1.

j. Detector and Electrometer Assembly A1. The detector and electrometer assembly receives the output from the if. amplifier and performs two main functions. First, the audio detector demodulates the if. signal and feeds the resultant output signal to audio amplifier V701 in the main unit. Secondly, dual meter detectors are used in a voltage-divider network to supply driving voltage to two separate electrometer stages. These are extremely high-impedance electron tubes which faithfully reproduce the applied input signal, with no degradation or amplification, in its amplifier. Two additional steps of attenuation, 10 db or 20 db, are inserted in the signal path by rotating SIGNAL ATTENUATOR DB switch S701 to its various positions. In the 0 SUBST ONLY and 0 CW ONLY positions of S701, 6 db attenuation is in the if. signal path. In the 20 DB position, 16 db of attenuation is in the path; in the 40, 60, and 80 DB positions, 26 db of attenuation is in the path.

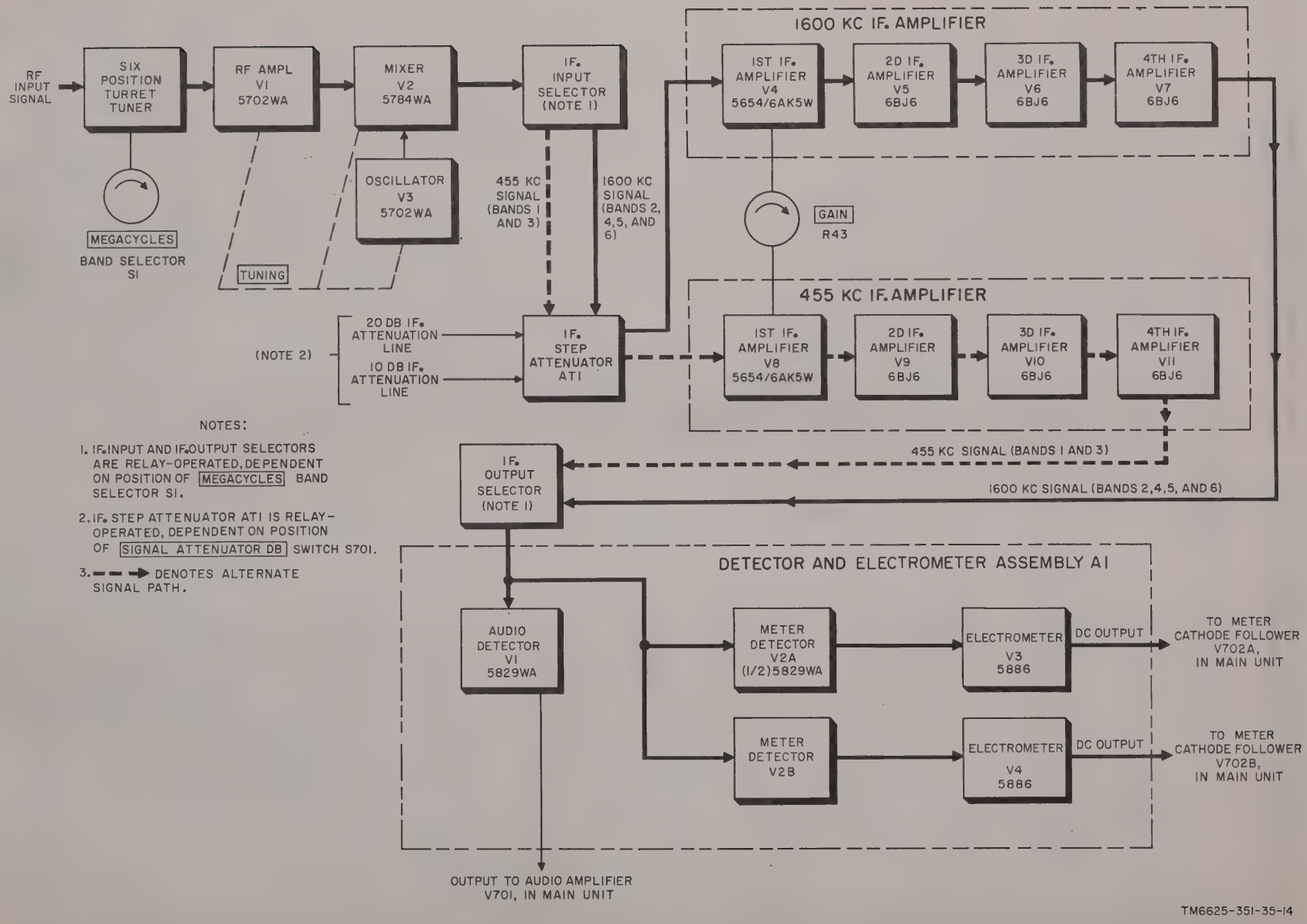

Figure 15. Tuning unit 1, block diagram.

output circuit. The electrometers supply driving voltage to meter cathode followers V702A and V702B in the main unit.

26. Rf Tuner Section, Detailed Analysis (fig. 16)

The six-position turret tuner (fig. 56) contains six separate phenolic segments on which are mounted rf transformers, trimmers, capacitors, and loading resistors for the six different frequency bands. Each tuner segment has three sets of coils and trimmers: the input grid circuit of the rf amplifier, the coupling circuit from the plate of the rf amplifier to the mixer, and the tuned circuit for the oscillator. Since the segments are essentially similar in design, except for component values and tuned frequencies, the circuit analysis given in the following subparagraphs is based on a detailed explanation, with MEGACYCLES band switch set to band 1 (fig. 16). The frequency bands are as follows:

Band	Frequency coverage (mc)	Intermediate frequency (kc)
1	0.15 to 0.36	455
2	0.36 to 0.87	1,600
3	0.87 to 2.1	455
4	2.1 to 5.2	1,600
5	5.2 to 12.7	1,600
6	12.7 to 30	1,600

a. Rf Transformer Primary Circuit. The rf signal from the main unit is fed through connector P1 (terminal A2) to contact 2 of the springfinger contacts on the rf chassis. The projecting terminal 2 on the tuner segment couples the incoming signal to the primary of antenna transformer T4. Terminal 3 of the tuner segment has a path of continuity to chassis ground through the wiper springfinger contacts. Therefore, terminal 3 on the tuner segment and its mating wiper contact connect one side of the primary winding of T4 to chassis ground. This rf transformer presents an impedance of approximately 50 ohms to the incoming signal.

b. Rf Transformer Secondary Circuit. The secondary of transformer T4, together with trimmer capacitors C8 and C9, steps up the voltage of the desired incoming signal. Terminal 6 of the tuner segment and the mating wiper contact applies the signal to the grid of rf amplifier V1. Terminal 5 of the tuner segment and the mating wiper contact connects the low-potential side of T4 secondary winding to chassis ground.

c. Rf Amplifier V1. The rf amplifier, V1, is a pentode amplifier with tuned circuits in the grid and plate circuits to provide selectivity in the stage. These tuned circuits are contained on the turret tuner, and are different for each of the six frequency bands. Turning MEGACYCLES band switch S1 connects the appropriate tuned circuit to the rf amplifier. Capacitor C52C is part of the three-section variable air-dielectric TUNING capacitor which serves to resonate the antenna transformer to the incoming signal frequency. Grid bias is provided by the voltage drop across cathode resistor R10. Capacitor C58 functions as the bypass capacitor. Resistor R9 is a screen-dropping resistor, with capacitor C57 serving as a screen bypass capacitor. Coils L2, L3, and L4, and capacitors C66, C67, and C68 prevent rf currents from circulating in the heater circuits of all three stages in the rf tuner section. Resistor R11, together with capacitors C56 and C61, provide decoupling for the plate circuit. Resistor R12 drops the B+ voltage to a value required by the plate circuit. The amplified output of rf amplifier V1 is developed across the primary of interstage transformer T2. Terminals 9 and 10 of the tuner segment, and their mating wiper contacts, create a path of continuity from the plate, pin 1, of V1 through the primary winding of T2, to decoupling resistor R11 and the power supply. The output signal is inductively coupled to the signal injection grid, pin 7, of mixer stage V2.

Note: Coil L1 and capacitor C59 function as a 1,600-kc trap. This circuit helps to prevent unwanted 1,600-kc signals from appearing in the 1,600-kc if. amplifier when this if. amplifier is operating. In band 3 (0.87 to 2.1 mc), which encompasses 1,600 kc as a frequency within its tuning range, the trap circuit is shorted to ground. This circuit arrangement enables an incoming rf signal of 1,600 kc to be received and detected in the conventional manner. In bands 2, 4, 5, and 6, however, the 1,600-kc if. amplifier is energized. A method

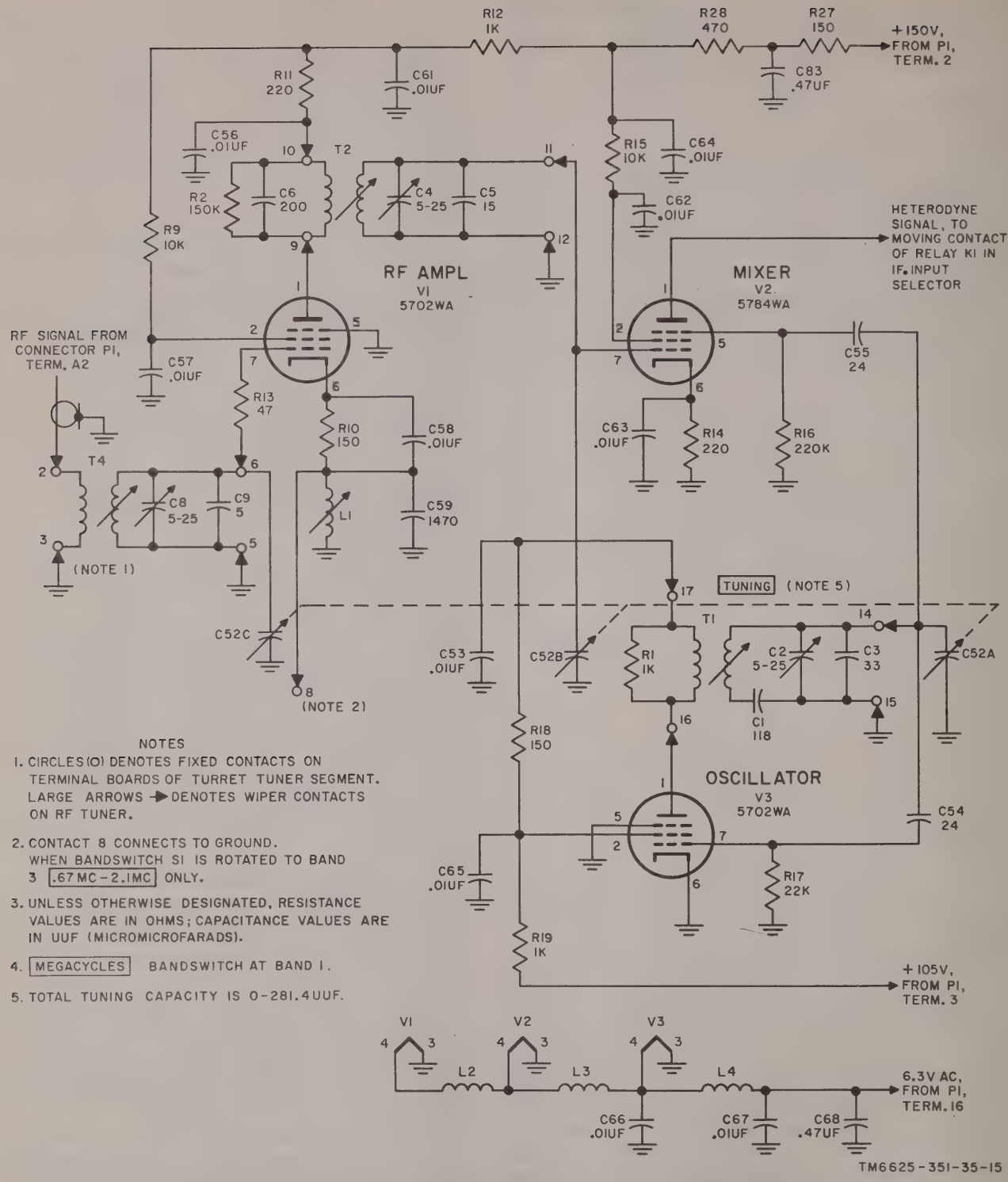

NOTES

1. CIRCLES (○) DENOTES FIXED CONTACTS ON TERMINAL BOARDS OF TURRET TUNER SEGMENT. LARGE ARROWS ➔ DENOTES WIPER CONTACTS ON RF TUNER.
2. CONTACT 8 CONNECTS TO GROUND. WHEN BANDSWITCH S1 IS ROTATED TO BAND 3 [.67 MC - 2.1MC] ONLY.
3. UNLESS OTHERWISE DESIGNATED, RESISTANCE VALUES ARE IN OHMS; CAPACITANCE VALUES ARE IN UUF (MICROMICROFARADS).
4. [MEGACYCLES] BANDSWITCH AT BAND 1.
5. TOTAL TUNING CAPACITY IS 0-281.4UUF.

Figure 16. Tuning unit 1 rf oscillator, mixer, and oscillator, simplified schematic diagram.

must be used to assure that a 1,600-kc incoming rf signal does not saturate the 1,600-kc if. amplifier and thereby produce erroneous meter indications. Tuned circuit L1 and C59 operate as an absorption wavetrap, drastically decreasing the response of the rf section (and therefore the if. amplifier) at the undesired incoming frequency of 1,600 kc. The tuned circuit introduces a degenerative rf voltage in the cathode circuit of V1 at the 1,600-kc frequency.

d. Oscillator V3. An Armstrong-type oscillator is used to generate a frequency, which is 455 kc higher than the incoming signal when band 1 (or band 3) is switched into the circuit. Contacts 16 and 17 on the tuner segment, and their mating spring-finger contacts on the rf chassis, connect the secondary of T1 to the plate (pin 1) of the oscillator. Contacts 14 and 15 on the tuner segment, and their mating spring-finger contacts on the rf chassis, connect the tuned primary winding of T1 between the grid (pin 7) of the oscillator and chassis ground. The oscillator is tuned by varying capacitor C52A, which is part of the three-section variable air-capacitor, driven by the front-panel TUNING control. The oscillator tracks with the frequency of the incoming signal, thus maintaining a constant difference frequency, which is the intermediate frequency. Transformer T1 is the feedback transformer for the oscillator. Its primary coil is in the grid circuit. The resonant frequency of T1 is determined by TUNING capacitor C52A, trimmer C2, padder C1, capacitor C3, and the primary inductance. The secondary winding is in the plate circuit, with R1, a loading resistor, connected across the winding to lower its Q. Resistor R17 is the grid resistor; C54 is the grid coupling capacitor. Resistor R18 and capacitor C53 form a plate decoupling network to prevent rf from modulating the +105-volt power supply. Resistor R19 is a voltage-dropping resistor for the screen and plate supplies. Capacitor C65 is the screen bypass capacitor.

e. Mixer V2. The oscillator output is taken from the tuned network in the oscillator grid circuit and is coupled through capacitor C55 to the oscillator injection grid (pin 5) of the mixer tube. At the same time, the output of the rf amplifier appears at the signal injection grid (pin 7) of this tube. The two signals are mixed within V2; the plate circuit of V2 (located in the if. input selector) is tuned to the difference between them. Resistor R14 is the cathode-bias resistor; C63 is the cathode bypass capacitor. Resistor R15 is the screen-dropping resistor, with C62 functioning as the screen bypass capacitor. Resistors R27 and R28 are B+ dropping resistors connected to the +150-volt bus; C64 and C83 are B+ decoupling capacitors. Resistor R16 is a grid resistor, providing a ground return for the oscillator injection grid (pin 5). The signal injection grid (pin 7) of the mixer contains a resonant circuit that consists of the secondary winding of transformer T2 and capacitors C4, C5, and C52B. Resistor R2 loads the circuit. Capacitor C52B, the third section of the TUNING capacitor, is used for resonating the mixer grid circuit to the frequency of the incoming rf signal. The circuit elements comprising the plate circuit of the mixer are located in the if. input selector subassembly (fig. 17).

27. If. Input Selector, Detailed Analysis (fig. 17)

The if. input selector subassembly contains two alternate tuned plate circuits for the mixer tube. Relays K1 and K2 select one (455 kc) or the other (1,600 kc) if. outputs from the mixer plate. Interstage transformer T22 or T23 serves as the plate load. Circuit action is as follows:

a. Input Circuit. The primary of transformer T22 and parallel capacitor C69 form a circuit which is resonant to 455 kc. Resistor R22 lowers the Q of the tuned circuit to an optimum value. The primary of transformer T23 and parallel capacitor C71 form a circuit which is resonant to 1,600 kc. Resistors R27 and R29 and capacitors C72, C77, and C83 comprise the plate decoupling network for mixer V2 (fig. 16). Feedthrough capacitors C75 and C76, in the +150-volt power supply line, bypass if. currents to ground. The coil of relay K1 controls the movable contact that connects either T22 or T23 into the mixer plate circuit. In the energized position of K1, transformer T23 (tuned to 1,600 kc) is connected to the plate circuit. Relay K1 is energized from the +150-volt source when the band switch is rotated to bands 2, 4, 5, and 6. Feedthrough capacitor C74 is used as an rf bypass. Resistor R21 serves as a voltage-dropping resistor to the coil of the relay; C73 provides a path to ground for relay contact switching transients.

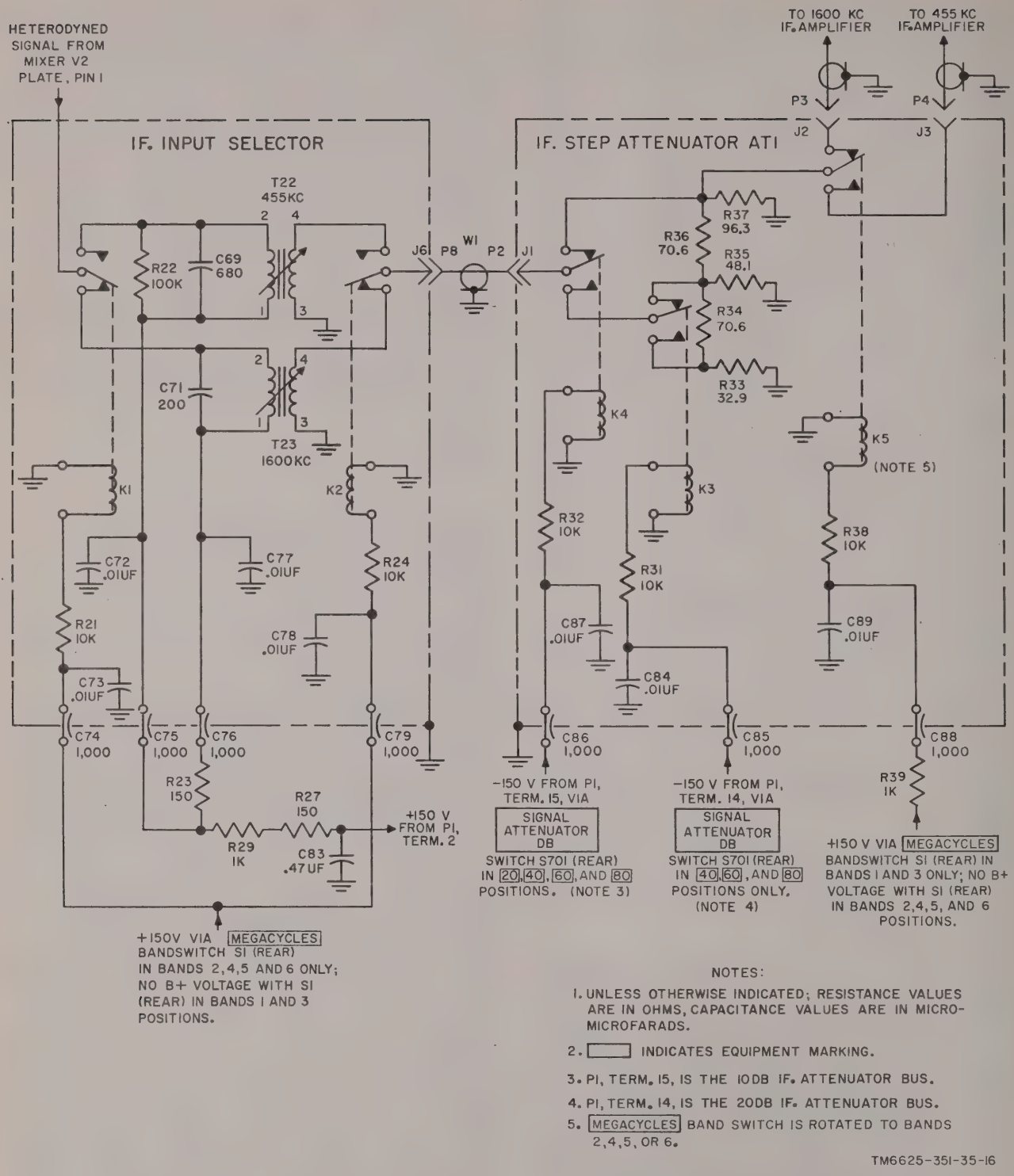

Figure 17. Tuning unit 1 if. input selector and if. step attenuator, schematic diagram.

b. Output Circuit. The coil of relay K2 controls the movable contact that selects the output of either T22 or T23 to feed if. step attenuator AT1. This relay is activated by the same voltage as K1, and is energized at the same time. Feedthrough capacitor C79 is an rf bypass. Resistor R24 serves as the voltage-dropping resistor in the

+150-volt bus; C78 is the transient bypass capacitor. The output of either if. transformer T22 or T23 is coupled from jack J6 through interconnecting cable assembly W1 to jack J1, on if. step attenuator AT1.

28. If. Step Attenuator, Detailed Analysis (fig. 17)

The if. step attenuator is basically a network of resistor pads together with two relays (K3 and K4) which switch different combinations of these pads into the signal path to achieve three steps of attenuation. This subassembly also contains a third relay, K5, which switches the attenuated if. signal to the input of either the 455-kc or the 1,600-kc if. amplifier.

a. Attenuator Action. Series resistors R34 and R36, together with shunt elements R33, R35, and R37, constitute the ladder network which furnishes the desired amount of attenuation to the incoming if. signal. Relay K4 is energized from the -150-volt source when SIGNAL ATTENUATOR DB switch S701 (rear section) is properly positioned. Relay K4 is deenergized with this switch in the 0 CW ONLY or in the 0 SUBST. ONLY position (para 12). The signal path is directly through the upper contact of relay K4 and through the movable contact of relay K5 to either output jack J2 or J3. There is no resistance in series with the signal path, but 6 db of insertion loss is present because of the shunting effect of the resistors to ground.

(1) When SIGNAL ATTENUATOR DB switch S701 is rotated to 20, 40, 60, or 80 DB, the coil of relay K4 is energized, and its movable contact creates a signal path through the movable contact of relay K3 (still deenergized) to the junction of resistors R35 and R36. Resistor R36 is now placed in series with the signal path, with the remaining resistors in the ladder network providing a shunting effect. This series-parallel network results in an additional 10-db loss in signal amplitude. (Actually, the signal is attenuated 16 db in relative level because of the inherent 6-db loss of the step attenuator subassembly.)

(2) When SIGNAL ATTENUATOR DB switch S701 is placed at 40, 60, and 80 DB, both relays K3 and K4 are energized. This action places resistors R34 and R36 in series with the signal path, with the other resistors in the ladder network still retaining their shunting effect. The result is a 20-db increase in signal attenuation with respect to the deenergized condition of both relays K3 and K4. (Actually, the signal is attenuated 26 db relative to the original incoming signal level because of the inherent 6-db loss of the step attenuator subassembly.)

b. Relay K4 Coil Circuit. Resistor R32 and capacitor C87 form a decoupling network for the coil of relay K4. Feedthrough capacitor C86 functions as an rf filter.

c. Relay K3 Coil Circuit. Resistor R31 and capacitor C84 form a decoupling network for the coil of relay K3. Feedthrough capacitor C85, connected in the -150-volt energizing line, functions as an rf filter.

d. If. Signal-Switching Relay K5. Relay K5 is energized from the +150-volt source when MEGACYCLES band switch S1 (rear section) is at 0.15-0.36 mc or 0.87-2.1 mc (band 1 or 3). In either of these positions of S1, the movable contact of relay K5 provides a path of continuity for the attenuated if. signal through jack J3 and mating plug P4 to the input of the 455-kc if. amplifier. When band switch S1 (rear section) is rotated to positions 2, 4, 5, and 6, the +150-volt bus is disconnected and relay K5 is deenergized; the movable contact of relay K5 then provides a path of continuity for the 1,600-kc if. signal through jack J2 and mating plug P3 to the input of the 1,600-kc if. amplifier.

e. Relay K5 Coil Circuit. Resistor R38 and capacitor C89 form a decoupling network for the coil of relay K5. Feedthrough capacitor C88, connected in the +150-volt energizing line, functions as an rf filter.

29. If. Amplifier, 455-Kc, Detailed Analysis (fig. 18)

The 455-kc if. amplifier consists of four tuned pentode amplifier stages in tandem, to provide a high degree of amplification and selectivity. B+ voltage for the tube plates and screens is provided to the junction of decoupling resistor R87 and capacitor C128 only when the MEGACYCLES band switch S1 is rotated to bands 1 and 3. In the other four positions of the band switch, the switch open-circuits the 150-volt bus, which leaves the entire 455-kc if. amplifier inoperative.

a. Bias Voltage Circuit. The amount of fixed negative dc voltage applied to the grid of first if. amplifier V8 is determined by the setting of the front panel GAIN control R43. This potential is applied to the grid by feedthrough capacitor C129 and effectively varies the gain of the stage. Resistor R63 functions as the grid resistor; C131 decouples signal variations from the bias power supply. A fixed-bias potential of -1.5 volts with respect to chassis ground is coupled through resistor R71 to the grid of second if. amplifier V9. Capacitor C143 provides additional filtering action for this bias potential.

b. First If. Amplifier V8. The attenuated signal from the if. step attenuator is fed through resistor R62, tuned transformer T29, and coupling capacitor C133 to the grid (pin 1) of first if. amplifier V8. Capacitor C133 prevents the fixed-bias voltage from shorting to ground. Capacitor C132 resonates the secondary winding of T29 to 455 kc. Resistor R64 loads the secondary of T29. Resistor R65, bypassed by C135, develops cathode bias. Resistor R69, shunted by C137 and C139, forms a plate decoupling network for the B+ voltage, which is fed through the primary winding of T31 to the plate (pin 5) of the tube. Resistor R66, bypassed by C136, drops the B+ voltage to a level required by the screen grid (pin 6). Capacitor C130 acts as a bypass for the suppressor grid (pin 7), which is internally connected to the cathode. Capacitor C134 and inductor L8 (fig. 99) prevent rf from circulating in the heater line. Transformer T31 serves as the plate load for V8. All if. transformers in tuning unit 1 are double-tuned and loaded to provide optimum skirt selectivity. The primary winding of T31 resonates with C138 and the secondary winding resonates with C141. Resistors R67 and R68, respectively, serve as loading resistors for the primary and secondary tuned networks of T31. The first if. output signal is coupled through C144 to the grid of the second if. amplifier. Capacitor C144 is used to prevent the fixed-bias voltage from shorting to ground through the secondary of T31.

c. If. Amplifiers V9 through V11. The second, third, and fourth if. amplifiers are similar in circuitry to the first, except for their biasing networks. Capacitors C146, C153 and C159, and inductors L9 and L11 (fig. 99) prevent rf from circulating in the common heater supply line.

(1) Second if. amplifier V9 receives a fixed bias from a voltage divider in the negative 150-volt bus which applies approximately -1.5 volts dc to its grid. Cathode bias is developed by R72.

(2) Third if. amplifier V10 operates with self-bias. The cathode current through R77 develops a dc voltage which is positive in reference to the grid (pin 1). The grid has a dc path to ground through the low-resistance secondary winding of T32.

(3) Fourth if. amplifier V11 operates with self-bias. The cathode current through R83 develops a dc voltage which is positive with reference to the grid (pin 1). The grid has a dc path to ground through the low-resistance secondary winding of T33. The output signal from V11 is applied to the if. output selector through T34.

30. If. Amplifier, 1,600-Kc, General Analysis

The 1,600-kc if. amplifier is identical in operation with the 455-kc if. amplifier. For the complete schematic diagram of this amplifier, refer to figure 99. The 1,600-kc if. amplifier, like the 455-kc if.

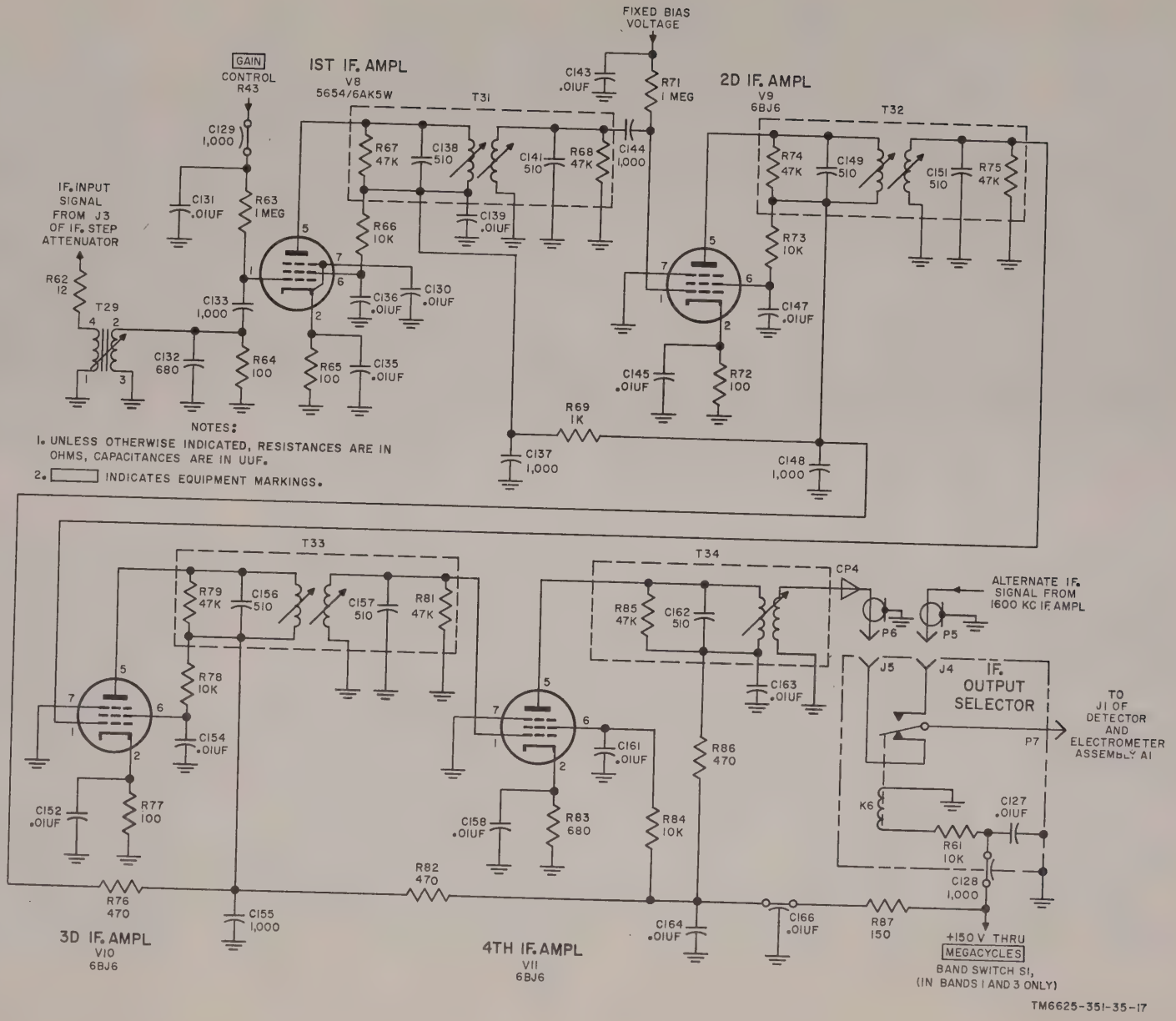

Figure 18. Tuning unit 1, 455-kc if. amplifier and if output selector.

amplifier (para 29), also consists of four tuned pentode amplifier stages in tandem to provide a high degree of selectivity and amplification. B+ voltages for the tube plates and screens are provided through dropping resistor R25 only when MEGACYCLES band switch S1 (rear section) is rotated to band 2, 4, 5, or 6. In the other positions, the switch cuts off these voltages, which leaves the entire 1,600-kc if. amplifier inoperative.

31. If. Output Selector (fig. 18)

The if. output selector selects the output of either the 1,600-kc or the 455-kc if. section and couples it direct to the detector and electrometer assembly. Connector plug P6 and mating jack J5 apply the output of the 455-kc if. amplifier to the selector; connector plug P5 and mating jack J4 apply the output of the 1,600-kc if. amplifier to the selector. This selector subassembly consists of a relay-operated switch and a decoupling network. Relay K6 is energized from the +150-volt source when the MEGACYCLES band switch S1 is rotated to band 1 or 3. This action positions the relay movable contact so that the output of the 455-kc if. amplifier has a path of continuity, through connector plug P7, to the input (J1) of the detector and electrometer assembly. Ressistor R61 and capacitor C127 constitute the relay decoupling network. Feedthrough capacitor C128 functions as an rf bypass.

32. Meter Detector and Electrometer Circuit, Detailed Analysis (fig. 19)

Because it is difficult to obtain meter indications that show the true peak values of pulses (especially at low-repetition rates), the detector and electrometer circuit has been especially designed to detect these voltages. This circuit presents a very high impedance to the incoming if. signal. The current drawn is so small that the output peak (or average) voltage detected is identical in magnitude with the input peak (or average) signal. The circuit action is as follows:

a. Meter Detector V2A. The if. signal from the if. output selector (para 31) is coupled to the plate of meter detector V2A (pin 6) through capacitor C7. Capacitor C7 charges through V2A when the positive portion of the input signal is applied to the meter detector. During the negative portion of the input signal, C7 discharges through R7 and causes the peak level of the input signal to be developed across R7 (negative in respect to ground).

b. Meter Detector V2B. Approximately two-thirds of the incoming if. signal amplitude is coupled to the plate of meter detector V2B through capacitor C11. The signal voltage is reduced to two-thirds of its original amplitude because of the voltage divider action of connecting one parallel network (resistor R5 and 10-uuf capacitor C8) in series with a second parallel network (resistor R6 and 5-uuf capacitor C9). Since the output signal from meter detector V2B has the same amplitude as that of its input signal, two-thirds of the original if. input signal (from the if. amplifier) is present across detector load resistor R8 (negative with respect to ground). In the heater circuit, C22 and C23 bypass residual if. signals to ground.

c. Electrometers V3 and V4, Dynamic Conditions. The voltage developed across V2A load resistor R7 is coupled through resistor R12 to the grid of electrometer V3. Likewise, the signal developed across V2B load resistor R8 is coupled through resistor R13 to the grid of electrometer V4.

(1) In the CW PEAK and PULSE PEAK positions of the function switch (on the main unit), thermal relays K1 and K2 are open. Each half of the meter detector dual diode has an identical resistance-capacitance time-constant circuit. For V2A, the time constant is determined by the values of coupling capacitor C7 and 20,000-megohm load resistor R7. For V2B, an identical value time-constant circuit is obtained by C11 and R8. Capacitors C7 and C11 charge very fast and discharge very slowly, so that the peak values of the incoming signal are detected

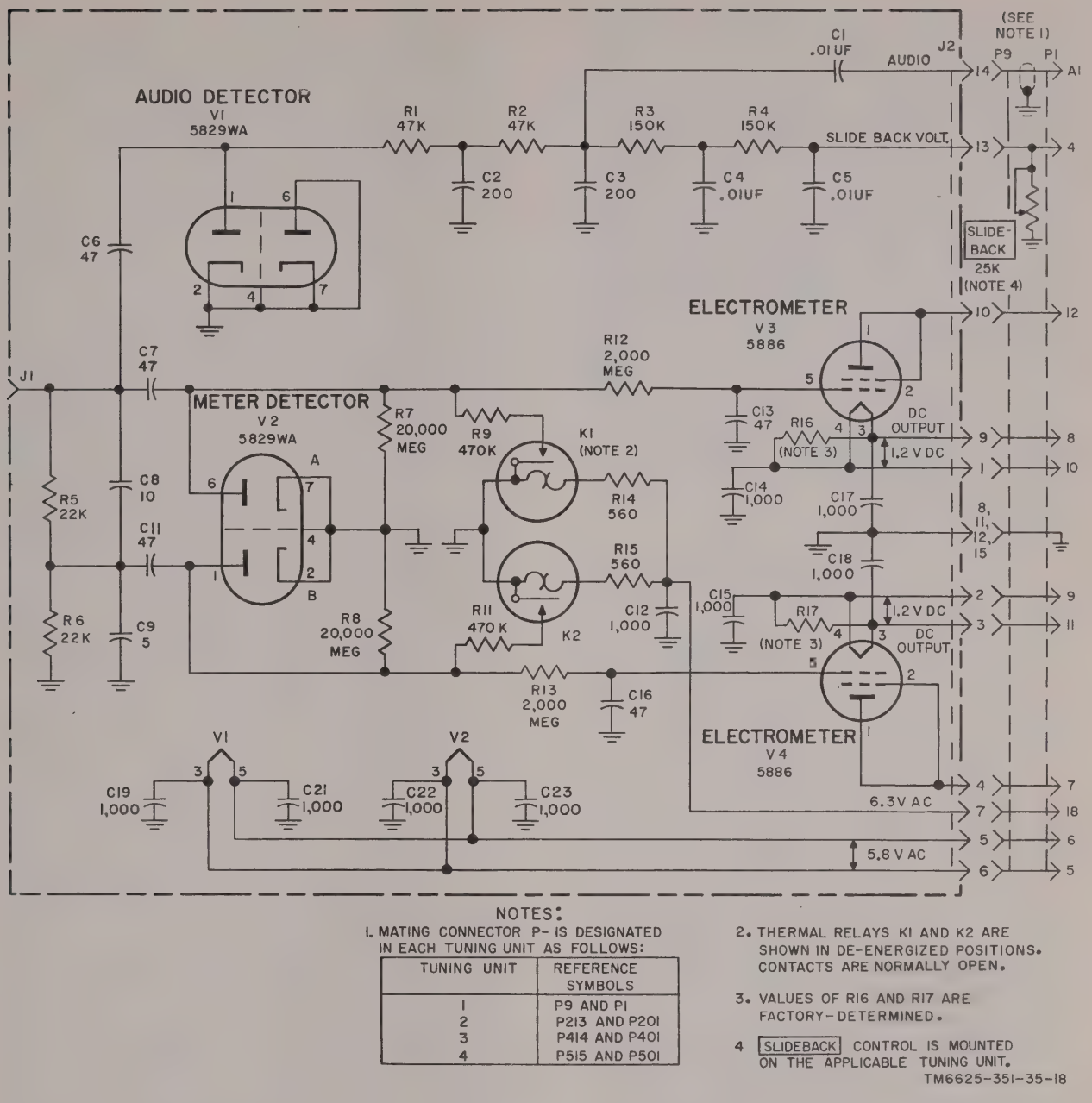

NOTES:

1. MATING CONNECTOR P- IS DESIGNATED IN EACH TUNING UNIT AS FOLLOWS:

TUNING UNIT	REFERENCE SYMBOLS
1	P9 AND P1
2	P213 AND P201
3	P414 AND P401
4	P515 AND P501

2. THERMAL RELAYS K1 AND K2 ARE SHOWN IN DE-ENERGIZED POSITIONS. CONTACTS ARE NORMALLY OPEN.
3. VALUES OF R16 AND R17 ARE FACTORY-DETERMINED.
4. SLIDEBACK CONTROL IS MOUNTED ON THE APPLICABLE TUNING UNIT.

TM6625-351-35-18

Figure 19. Detector and electrometer assembly, schematic diagram

and maintained at a high level for coupling to the metering circuit.

(2) In the CW AVERAGE position of the function switch, thermal relays K1 and K2 close. The closing of the thermal relays is obtained by applying 6.3 volts ac power through function switch S702, terminal 7 of connector J2, and dropping resistors R14-R15 to the heaters of the thermal relays. Under this condition, the load resistors for detectors V2A and V2B are returned to chassis ground by the much lower resistance of the 470,000-ohm resistors, R9 and R11. Because of the considerably lower value of the time-constant circuit, only average values of the incoming signal are detected and

coupled to the metering circuit in the main unit.

d. Electrometers V3 and V4, Circuit Description. Because of the very high input impedance of the type 5886 electrometer tube, almost no grid current is drawn by V3 and V4. Resistor R12 and capacitor C13 in the grid circuit of electrometer V3 serve as a filter for the detected if. signal. Capacitor C13 also functions to place the grid of V3 at low rf potential. An identical circuit is used at the input to electrometer stage V4, with R13 and C16 as the if. filter elements. Capacitor C12, connected to the junction of thermal relay heater resistors R14 and R15, bypasses if. currents in the heater circuit of thermal relays K1 and K2 to chassis ground.

(1) Electrometer V3 serves as an extremely high impedance triode amplifier. Its screen (pin 2) and its plate (pin 1) are tied together and receive a dc plate potential through terminal 10 of receptacle J2 from the cathode of meter cathode follower V702A in the main unit. The heater circuit of V3 receives 1.2 volts dc through terminals 1 and 9 of J2 from a rectifier circuit in the main unit power supply and is returned to -150 volts dc through R719. Resistor R719 serves as the electrometer output load and the grid return of V702A. Capacitors C14 and C17 bypass rf currents in the heater circuit to chassis ground and prevent modulation feedback to the power supply. Resistor R16 is a balancing resistor which is tied across the two heater terminals. The value of R16 is selected in production to counteract variations in heater resistance which are inherent in the manufacture of these tubes. The detected signal envelope voltage (negative with respect to ground), which is identical in amplitude with the output of meter detector V2A, is taken from the heater circuit (pin 3). This signal is applied through terminal 9 of J2 to the metering circuit in the main unit.

(2) Electrometer V4 also functions as an extremely high input impedance triode amplifier. Similar to electrometer V3, the plate (pin 1) and screen (pin 2) are tied to the common source of plate potential. For V4, however, the source voltage is through terminal 4 of J2, which connects to the cathode of meter cathode follower V702B in the main unit. The heater circuit of V4 receives 1.2 volts dc, through terminals 2 and 3 of J2, from a separate rectifier circuit in the main unit power supply. Capacitors C15 and C18 bypass rf currents in the heater circuit to chassis ground, and serve the same functions as capacitors C14 and C17 for stage V3. Similarly, R17 is the balancing resistor for the heater circuit. For this stage, the detected signal envelope voltage is one-third the amplitude of electrometer V3, since the voltage divider at the input to meter detector V2 divides the incoming if. signal into a ratio of 3 to 1. This detected signal envelope voltage (negative with respect to ground) is taken from the heater circuit (pin 3) and is applied through terminal 3 of J2 to the metering circuit in the main unit.

e. Signal and Power Paths. Interconnections from the output of the detector and electrometer assembly to the main unit are identical in all four tuning units. Essentially, four components comprise the interconnection system. These are:

(1) A multipin receptacle, J2, which is an integral nonreplaceable part of the detector and electrometer assembly.

(2) A mating multipin connector (P9 for tuning unit 1) which is a subminiature plug-in connector that mates receptacle J2.

(3) A wiring harness which interconnects the tuning unit and the detector and electrometer assembly.

(4) A 20-pin connector which is mounted at the rear of the tuning

unit. This receptacle is the terminating point for the wiring harness. When a tuning unit is inserted into the compartment provided in the main unit, this 20-pin connector mates the 20-pin receptacle located in the interior of the main unit tun- compartment.

33. Audio Detector V1 (fig. 19)

Audio detector V1 is also mounted within the detector and electrometer assembly. The amplified if. signal, coupled through the if. input selector, is detected by this stage, filtered, and fed to the main unit for audio monitoring.

a. Input Circuit. Input connector J1 receives the if. signal from the if. output selector. Capacitor C6 couples this signal to one plate (pin 1) of the dual diode audio detector. One diode of the audio detector is not used, and its elements (pins 6 and 7) are connected to chassis ground.

b. Output Circuit, without Slideback Action. Positive alternations of the incoming signal are detected at the plate. Residual if. signal frequencies are filtered from the detected audio signal by two L-section pads, which consist of resistors R1 and R2, and capacitors C2 and C3. The filtered output signal is coupled through capacitor C1 to terminal 14 of multipin receptacle J2 and its mating plug P9 (when tuning unit 1 is in use) for application to the audio amplifier in the main unit. Capacitors C19 and C21 bypass all rf currents in the filament circuit to ground.

c. Output Circuit, with Slideback Action. The SLIDEBACK control, which is mounted on the tuning unit front panel, provides a means of reducing the amplitude of detected signals to the threshold of audibility. This circuit arrangement achieves a high degree of discrimination between the monitored signal and other interfering signals that may be present. In the METERED SLIDEBACK position of function switch S702, the output of the negative 150-volt power supply is applied across SLIDEBACK control R92 (for tuning unit 1), voltage divider resistor R709 (mounted on function switch S702), and chassis ground.

Note: For tuning unit 2, the SLIDEBACK control is R273; for tuning unit 3, the control is R473; for tuning unit 4, the control is R587.

(1) Depending on the position of the variable arm of this control, a negative voltage within the range from zero to approximately -35 volts with respect to ground is present at terminal 13 of connectors P9 and J2.

(2) This negative voltage is coupled to two L-section filters, which consist of resistors R3 and R4, and capacitors C4 and C5, connected in series with the L-section filters (R1-C1 and R2-C3) which are tied to the plate output of the audio detector.

(3) The negative voltage from the SLIDEBACK control has a path of continuity through R4, R3, R2, and R1 to bias the plate of audio detector V1. Under this condition, only those incoming if. signals with an amplitude that can override the negative bias potential are detected. In slideback operation of the test set, the SLIDEBACK control is rotated to that setting that permits the operator to hear the least audible signal. This signal is at the threshold of audible sensitivity.

Section IV. THEORY OF TUNING UNIT 2

34. Block Diagram of Tuning Unit 2 (fig. 20)

The block diagram for tuning unit 2 is shown in figure 20. For complete circuit details, refer to the overall schematic diagram (fig. 100).

a. Rf Tuner. The rf tuner is a subassembly which houses the two different sections for covering the 20- to 220-mc frequency spectrum in two bands. These are as follows:

(1) *27-mc section.* With band selector S201 set to the 20-70 mc position, first rf amplifier V201 receives

the incoming rf signal which is coupled from the main unit through connector plug P202 and mating jack J201. The amplified rf signal is then applied to second rf amplifier V202 for further amplification. Two signals are coupled to mixer V203A; one is the amplified rf output of V202, the second is the output of oscillator V203B. The oscillator generates a signal that tracks 10.7 mc higher than the incoming rf signal. The mixed stage heterodynes the rf incoming signal with the oscillator signal; this produces a difference frequency (10.7 mc) output that is coupled through section A of band selector S201 to the if. step attenuator.

(2) *70-220-mc section.* The 70-220-mc section functions identically with the 20-70-mc section, except that selector S201 must be set to the higher frequency band for its operation. First and second rf amplifiers V204 and V205, mixer V206A, and oscillator V206B serve the same purpose as described in (1) above, with the oscillator also tracking 10.7 mc above the incoming rf signal.

b. If. Step Attenuator AT201. The if. step attenuator is a ladder network which, similar to the step attenuator in tuning unit 1 (para 25*f*), provides an inherent 6-db loss in the signal path before the signal enters the if. amplifier. Two additional steps of attenuation (each 10 db) are inserted when SIGNAL ATTENUATOR DB switch S701 (in the main unit) is rotated to its last four clockwise positions. With S701 rotated to its 20 DB front-panel setting, the 10-db attenuation line is energized and the incoming signal is reduced in amplitude by 16 db. (This total loss is obtained by adding the 6-db inherent loss of the subassembly to the loss produced by energizing the 10-db attenuation line.) With S701 rotated to its 40, 60, or 80 db position, the 20-db attenuation line is energized and the incoming signal is reduced in amplitude by 26 db. (This total loss is obtained by adding the 6-db inherent loss of the subassembly to the loss produced by energizing the 20-db attenuation line.) The output of the if. step attenuator is coupled to the first if. amplifier.

c. If. Amplifier 10.7-Mc. This circuit includes the first through fourth if. amplifiers, V207 through V210, and if. cathode follower V211. The four amplifier stages provide additional signal gain and selectivity. Each stage is tuned to the 10.7-mc output signal from the mixer stage. The output of the last if. amplifier stage is coupled to an if. cathode follower, V211, which improves the pulse response by functioning as a low-impedance source for driving the meter signal detector.

d. Detector and Electrometer Assembly A201. The detector and electrometer assembly, A201 is identical with, and completely interchangeable with, the detector and electrometer assembly used in tuning unit 1 (para 25*j*). It performs the same functions in each of the four tuning units, and delivers both an audio output (to the audio amplifier in the main unit) and a dc output (to the metering circuit in the main unit).

35. Rf Tuner, Analysis of 20-70-Mc Amplifiers (fig. 21)

With the band selector rotated to the 20-70 mc position, a path of continuity is provided from switch S201B, terminal 1, to matching transformer T201. The signal voltage is amplified by first rf amplifier V201 and is coupled to second amplifier V202. Tuned circuits in the grid and plate add gain and selectivity to the stage.

a. First Rf Amplifier V201. The signal voltage from band selector S201 is coupled to the primary winding of rf transformer T201. Capacitor C201, in parallel with the primary of T201, maintains the input voltage standing wave ratio at a low value and makes the input circuit appear as a 50-ohm load. The transformer T201 secondary is directly connected to the tuned grid circuit of V201. The tuned grid circuit consists of inductor L201A, capacitor C202, coil L202, and trimmer capacitor C203. Cathode bias is provided by the voltage drop across

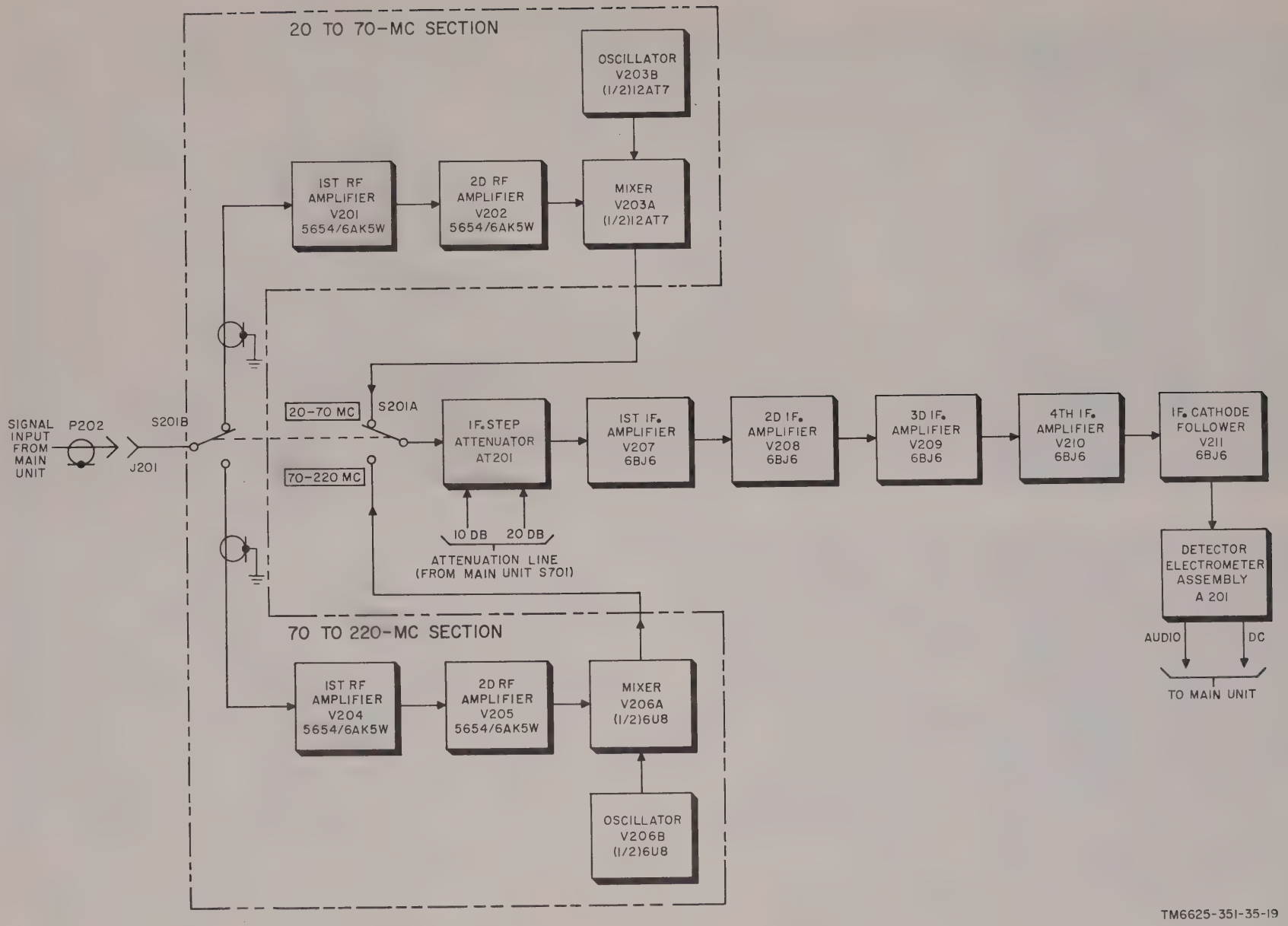

Figure 20. Tuning unit 2, block diagram.

R202, which is bypassed by C232 and C233. Capacitor C234 is the screen grid bypass. The rf output voltage in the plate circuit of V201 is developed across the parallel-tuned circuit which consists of tuning inductor L201B, capacitor C209, coil L203, and trimmer capacitor C211. Resistors R203 and R204 are used to load the plate tuned circuits. Resistor R209 and capacitor C208 provide decoupling for the plate circuit. Bypass capacitor C258 and choke L223 are connected in the 6.3-volt bus and prevent rf currents from circulating in the heater line. The voltage across the plate tuned circuit is coupled to the grid of second rf amplifier V202 through capacitor C212.

b. Second Rf Amplifier V202 (fig. 21). The signal voltage from first rf amplifier V201 is amplified by second rf amplifier V202 and coupled to mixer stage V203A. The input signal voltage is developed across grid resistor R205. Cathode bias is developed by the voltage drop across R206, which is bypassed by C238 and C239.

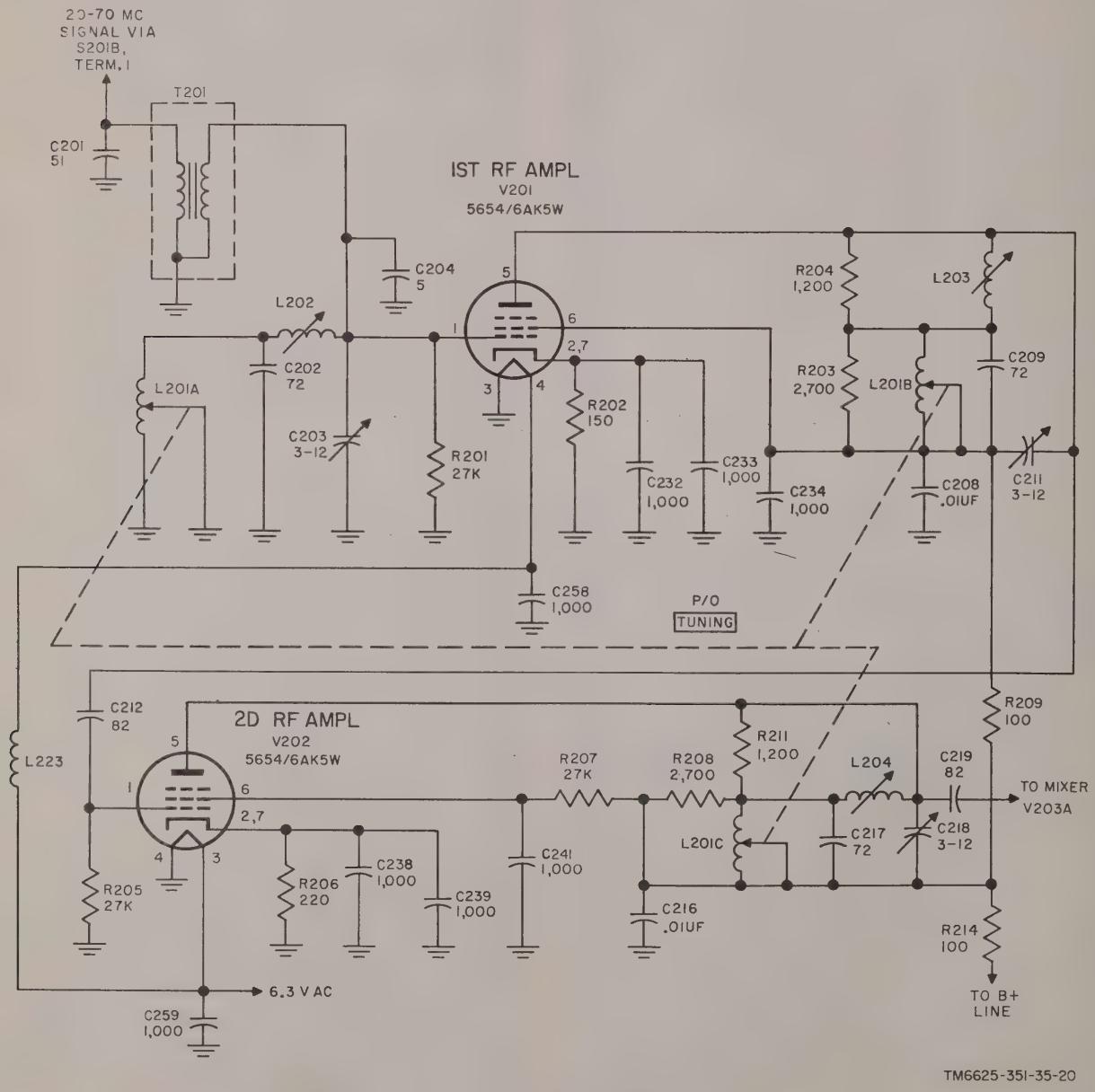

Figure 21. First and second rf amplifiers (20-70 mc), schematic diagram.

Resistor R207, the screen-dropping resistor, is bypassed by C241. The rf output voltage in the plate circuit is developed across the tuned plate circuit, which consists of tuning inductor L201C, capacitor C217, coil L204, and trimmer capacitor C218. Resistors R208 and R211 are used to load the plate tuned circuits. Resistor R214 and capacitor C216 provide plate circuit decoupling. Bypass capacitor C259 prevents rf currents from circulating in the heater circuit. The voltage across the plate tuned circuit is coupled to the grid of mixer stage V203A through capacitor C219.

36. Rf Tuner, Analysis of 20-70-Mc Mixer and Oscillator (fig. 22)

The mixer stage, V203A, receives signals from second rf amplifier V202 and from oscillator V203B. The oscillator generates a frequency which is 10.7 mc higher than the signal frequency. The two signals are mixed within V203A, the plate circuit of which is tuned to the difference frequency of 10.7 mc.

a. Mixer V203A. The signal voltage from second rf amplifier V202 is applied through coupling capacitor C219 to the grid (pin 2) of the mixer. The voltage generated by oscillator V203B is also applied to the grid of the mixer by coupling capacitor C222. The input voltages are developed across grid resistor R212. Cathode bias is developed by the current flow through R213, which is bypassed by C221. Resistor R219 and capacitor C229 provide decoupling for the plate circuit. The plate circuit load consists of the primary of rf transformer T202 and its parallel capacitor C227. Resistor R217 functions as a parasitic oscillation suppressor. Bypass capacitor C257 prevents rf currents from circulating in the 6.3-volt ac heater circuit. The 10.7-mc output of the mixer voltage is fed through switch S201A to if. step attenuator A201 (fig. 25).

b. Oscillator V203B. A plate tuned oscillator is used to generate the local

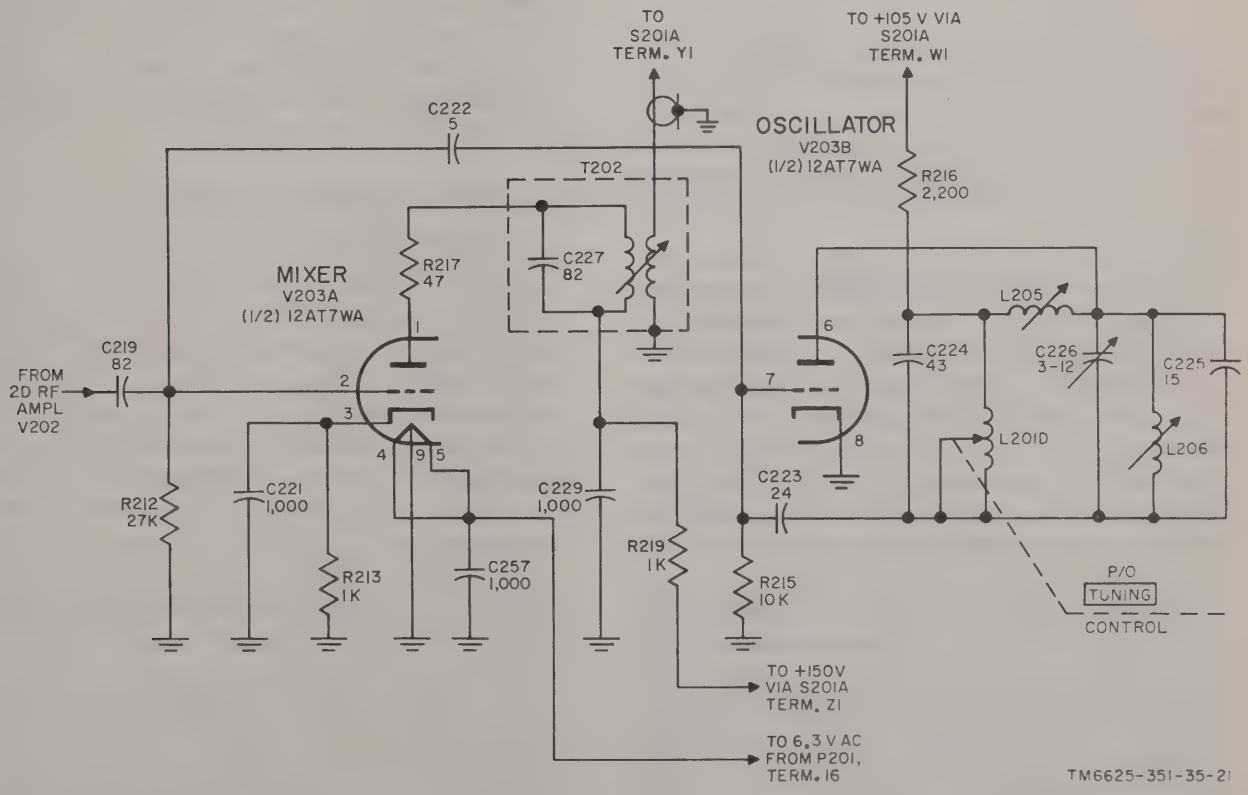

Figure 22. Tuning unit 2, mixer and oscillator (20-70 mc), schematic diagram.

oscillator frequency, which is 10.7 mc higher than the input signal frequency. The oscillator is resonated by tuning inductor L201D, which is mechanically coupled to the inductuner sections that resonate the first and second rf amplifiers to the incoming rf signal. Oscillations are produced in the plate parallel-tuned circuit, which consists of tuning inductor L201D, capacitors C224, C225, and C226, and coil L205. Coils L205 and L206, and capacitor C226 are made adjustable for tracking the oscillator during alignment. Feedback from the plate to the grid is obtained through capacitor C223. Resistor R215 is the grid-leak resistor. The cathode is connected direct to ground. Plate voltage is applied through voltage-dropping resistor R216 direct from section W of band selector S201A when this switch is in the 20-70 mc position. The oscillator output is coupled to the grid of mixer stage V203A through capacitor C222.

37. Rf Tuner, Analysis of 70-220-Mc Amplifiers (fig. 23)

When switch S201B is set to the 70-220-mc position by rotation of the band selector, the signal voltage is coupled to first rf amplifier V204 through rf transformer T203. The signal voltage is amplified and coupled to second rf amplifier V205.

a. First Rf Amplifier V204. The signal voltage from the main unit enters the tuning unit and is coupled to switch S201B by a length of coaxial cable. When S201B is in the 70-220-mc position, the signal is applied to rf transformer T203 and coupled to the tuned grid circuit of V204. This circuit consists of tuning inductor L207A and capacitor C231. Coil L208 in the grid circuit suppresses parasitic oscillations. Cathode bias is provided by the voltage drop across R221, which is bypassed by C205A and C205B. Resistor R222 is the screen-dropping resistor, bypassed by capacitor C205D. Bypass capacitor C205C and choke L224 prevent rf currents from circulating in the heater circuit. Resistor R223 lowers the Q of the tuned plate circuit. Resistor R224 and capacitor C235 provide plate decoupling. The rf output voltage is developed across the parallel-tuned circuit, which consists of tuning inductor L207B, capacitor C236, and coil L209. Coil L211 in the plate circuit suppresses parasitic oscillations. The output is coupled to the grid of the second rf amplifier V205 by capacitor C237.

b. Second Rf Amplifier V205. The signal voltage from first rf amplifier V204 is amplified by second rf amplifier V205 and coupled to the mixer stage V206A. The input signal voltage from V204 is developed across grid resistor R225. Cathode bias is developed by the voltage drop across R226, which is bypassed by C213A and C213B. Resistor R227 lowers the screen voltage and is bypassed by capacitor C213D. Resistor R228 lowers the Q of the tuned plate circuit. Resistor R233 and capacitor C242 provide decoupling for the plate circuit. Choke L225 and capacitor C213C prevent rf currents from circulating in the heater circuit. The rf output voltage is developed across the parallel-tuned circuit, which consists of L207C, capacitor C243, and coil L212. Coil L213 in the plate circuit suppresses parasitic oscillations. The rf output is coupled to the grid of mixer stage V206A through C244.

38. Rf Tuner Analysis of 70-220-Mc Mixer and Oscillator (fig. 24)

Mixer stage V206A receives signals from second rf amplifier V205 and oscillator V206B. The oscillator generates a frequency that is 10.7 mc higher than the signal frequency. The two signals are mixed within the tube, whose plate circuit is tuned to the difference frequency of 10.7 mc.

a. Mixer V206A. Signal voltages from second rf amplifier V205 and from oscillator V206B are applied to the grid of the mixer. The input voltages are developed across grid resistor R229. Cathode bias is developed by the voltage drop across R232, which is bypassed by C247. Resistor R231 is the screen-dropping resistor; it is bypassed by capacitor C246.

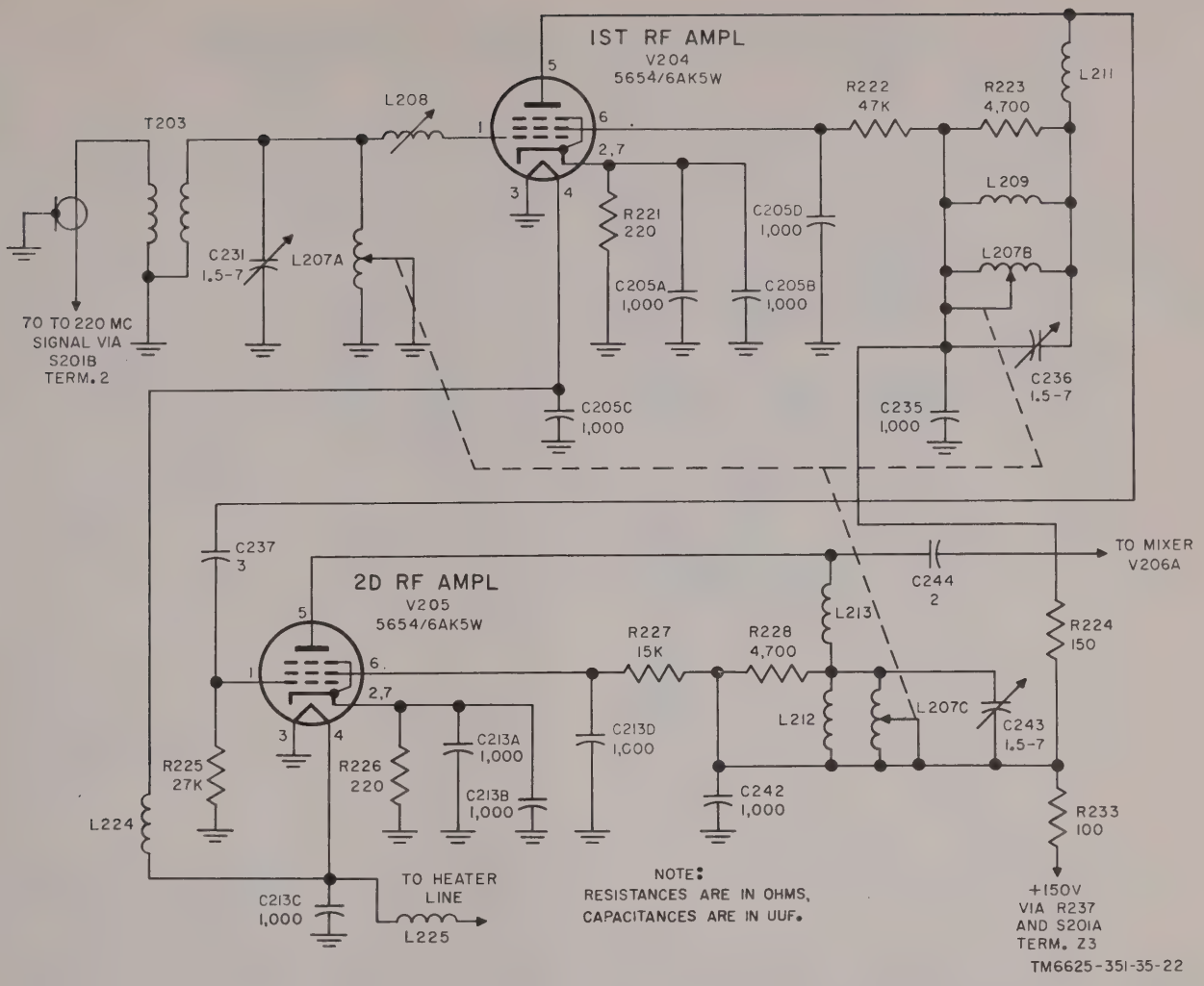

Figure 23. First and second rf amplifiers (70-220 mc), schematic diagram.

Resistor R238 and capacitor C253 provide decoupling for the plate circuit. Resistor R236 is a parasitic suppressor. Filament bypass capacitor C261 and choke L226 prevent rf currents from circulating in the heater circuit. The rf output is developed across the primary of transformer T204 and capacitor C254, which make up a parallel-tuned circuit tuned to 10.7 mc. All other frequencies present in the output are suppressed. The secondary of T204 is connected through terminal Y3 of switch S201 (rear), to the input of if. step attenuator AT201.

b. Oscillator V206B. A plate tuned oscillator is used to generate the local frequency which is 10.7 mc higher than the input signal frequency. The oscillator is resonated by tuning inductor L207D, which is mechanically coupled to the inductuner sections which tune the first and second rf amplifiers to the incoming rf signal. The oscillator tuned circuit consists of tuning inductor L207D, trimmer capacitor C249, and coil L215. Coil L214 is a plate choke that suppresses undesired frequencies. Feedback from the plate (pin 1) to the grid (pin 9) is made through capacitor C248. Resistor R234 is the grid-leak resistor. Plate voltage, 105 volts positive to ground, is applied through voltage-dropping resistor R235 from terminal W3 of band selector S201A when this switch is placed in the 70-220 mc position. The oscillator signal is coupled from the plate (pin 1) to the grid of the mixer through capacitor C245.

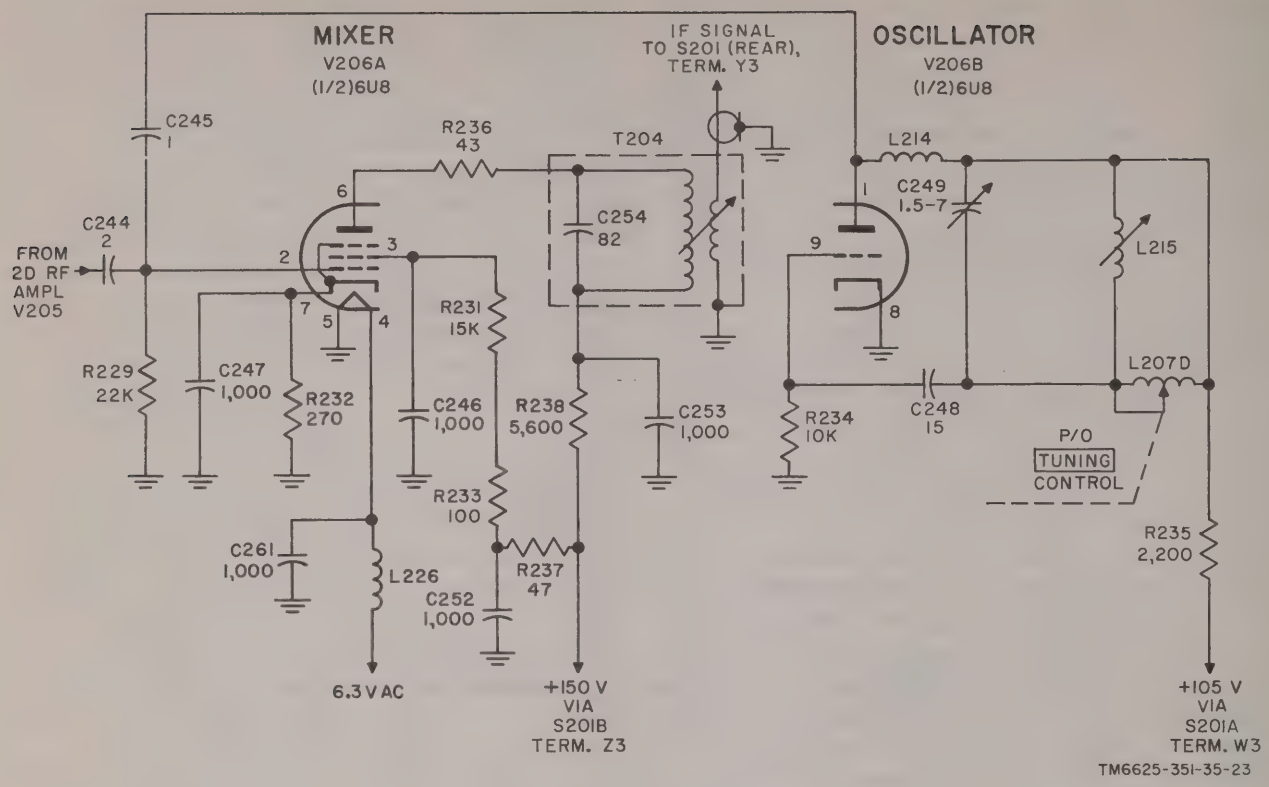

Figure 24. Tuning unit 2, mixer and oscillator (70-220 mc), schematic diagram.

39. If. Step Attenuator AT201 (fig. 25)

The output of either the 20-70-mc tuning section or the 70-220-mc tuning section is coupled through wafer section Y of switch S201A (rear) and cable assembly W201 to input jack J1 on if. step attenuator AT201. Relative steps of zero, 10 db, or 20 db of attenuation are introduced into the circuit, depending on the position of the SIGNAL ATTENUATOR DB control and switch S701, located in the main unit.

a. In the 0 SUBST. ONLY and 0 CW ONLY positions of SIGNAL ATTENTUATOR DB switch S701, both relays K1 and K2 are deenergized. Under this condition, the if. signal at input connector J1 has a path of continuity through the movable contact of relay K2 direct to output connector J2. Connector plug P211 and a short length of coaxial cable feed the signal to the primary of transformer T205.

b. In the 20 DB position of SIGNAL ATTENUATOR DB switch S701, the -150-volt supply line has a path of continuity from terminal 15 of multipin connector P201 (on the rear of the tuning unit), feedthrough capacitor C2, and voltage-dropping resistor R7 to the coil of relay K2. With relay K2 energized, a 10-db T-pad (consisting of resistors R3, R4, and R5) is inserted between the output of the mixer stage and the input to interstage transformer T205. The if. signal from the mixer has a path of continuity through the movable contact of relay K2 (energized) and through the movable contact of relay K1 (deenergized) to the 10-db T-pad. The output signal at connector J2 is, therefore, 10 db smaller in amplitude than the circuit conditions present before energizing relay K2.

c. In the 40-, 60-, and 80-db positions of SIGNAL ATTENUATOR DB switch S701, the -150-volt supply line is coupled to two terminals (14 and 15) of multipin connector P201 (on the tuning unit). Under this condition, -150 volts dc is also applied through feedthrough capacitor C1 and voltage-dropping resistor R6 to energize the coil of relay K1. With both relays

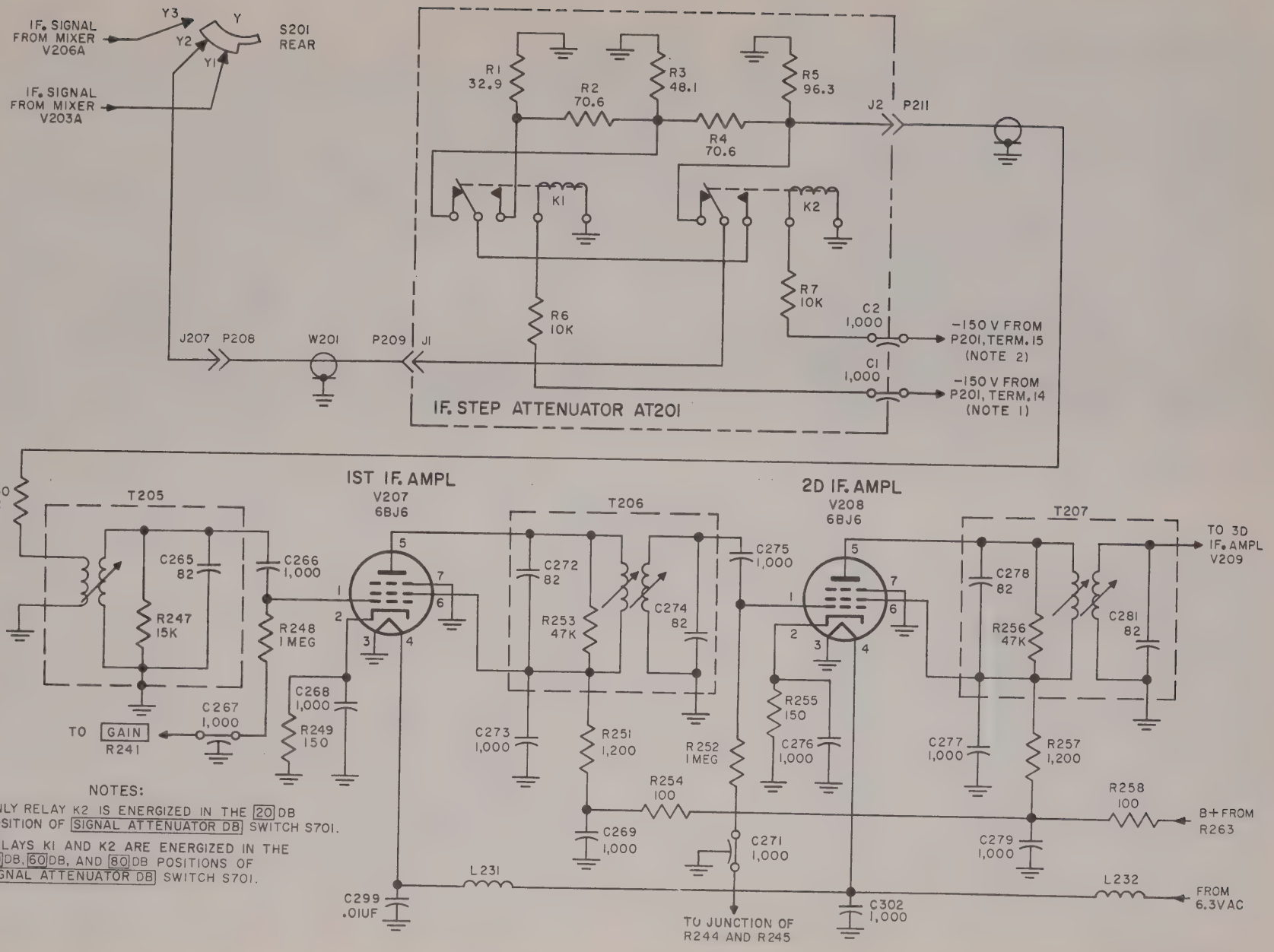

Figure 25. Tuning unit 2, if. step attenuator with if. amplifiers V207 and V208, schematic diagram.

energized, two 10-db T-pads are inserted in series between the output of the mixer stage and the input to interstage transformer T205. The second T-pad consists of resistors R3 (which is common to both the first and second T-pad), R2, and R1. The if. signal has a path of continuity through the movable contacts of relays K2 and K1 (both in their energized conditions) to the two series-connected T-pads. The output signal at connector J2 is, therefore, 20 db smaller in amplitude than the circuit conditions present before energizing the two relays, K2 and K1.

40. If. Amplifier, Detailed Analysis (fig. 25 and 26)

The if. amplifier subassembly houses interstage transformer T205, four amplifiers V207 through V210 operating at a center frequency of 10.7 mc, and a low-output impedance cathode follower, V211 which supplies driving power to the audio and meter detectors within detector and electrometer assembly A201. The bandwidth of the if. amplifier circuit is 80 kc ±10.

a. Interstage Transformer T205 (fig. 25). The attenuated if. signal at connector J2 on if. step attenuator AT201 is dc coupled, through resistor R250 to the primary winding of T205. The signal is stepped up in amplitude by T205 secondary winding, which is tuned to 10.7 mc when this winding is resonated with the parallel-connected capacitor C265. Resistor R247 loads the secondary winding. The if. signal is coupled from the secondary of T205, through C266, to the grid of first if. amplifier V207.

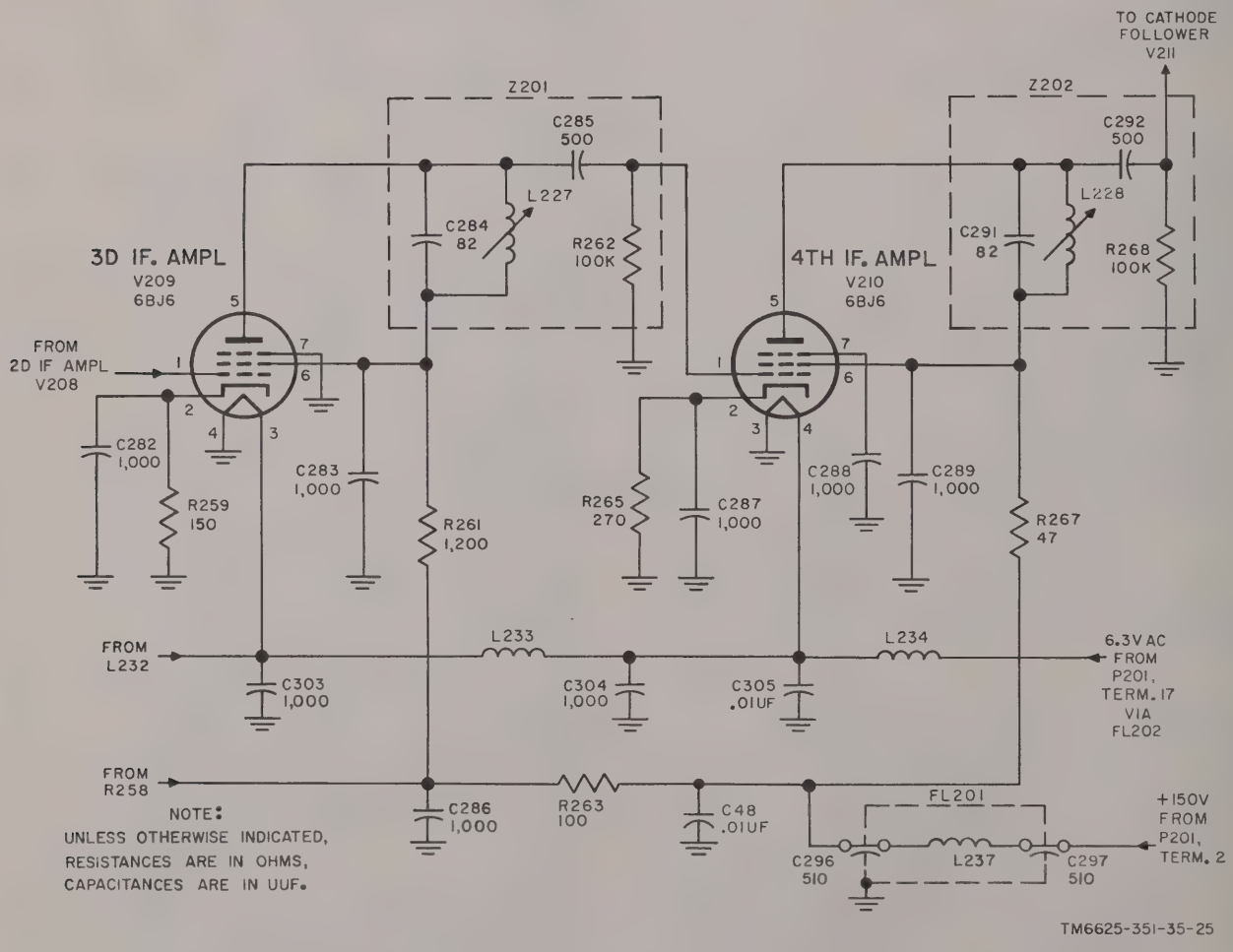

Figure 26. Tuning unit 2, if. amplifiers V209 and V210, schematic diagram.

b. If. Amplifiers V207 and V208 (fig. 25). Although all four if. amplifiers are essentially the same in function and description, the method of biasing V207 and V208 differs from that employed in the circuits for V209 and V210 (fig. 26). A second difference exists because double-tuned transformers are connected in the plate circuits of V207 and V208; single-tuned impedance networks are sufficient to maintain the desired selectivity in third and fourth amplifiers, V209 and V210 (fig. 26).

(1) The secondary of if. interstage transformer T205 is tuned to 10.7 mc and feeds the signal to the control grid of V207 through capacitor C266. Cathode bias is supplies by the voltage drop across R249, which is bypassed by C268. Grid resistor R248 is connected through feedthrough capacitor C267 to the variable arm of GAIN control R241. The feedthrough capacitor functions as an rf bypass and couples the bias voltage from the panel-mounted GAIN control to the grid of V207. The amplification of the signal through V207 is dependent on the bias voltage applied to the grid (pin 1) through GAIN control R241. Resistor R251, bypassed by C273, decreases the screen grid and plate voltage. Resistor R254 and capacitor C269 provide decoupling for the plate and screen circuits. Bypass capacitors C299 and C302, together with chokes L231 and L232, prevent rf currents from circulating in the heater circuit. The output of V207 is applied to the primary of T206. The primary winding and the parallel capacitor, C272, resonate together at the intermediate frequency. The output of T206, developed across the secondary winding and parallel capacitor C274, is coupled to second if. amplifier V208. Resistor R253 lowers the Q of the transformer tuned circuit.

(2) The signal from tuned transformer T206 is coupled through capacitor C275 to the grid of second if. amplifier V208. Capacitor C275 prevents the bias voltage from shorting to ground. Grid resistor R252 is connected to a fixed source of negative bias potential (R244 and R245) through feedthrough capacitor C271. Resistors R244 and R245 form a voltage-divider network for the -15-volt bias line and are physcially located on terminal board TB201 (fig. 64). Except for the difference in biasing, corresponding parts in the second if. amplifier state function identically with those in the first if. amplifier stage.

c. If. Amplifiers V209 and V210 (fig. 26). The output of second if. amplifier V208 is coupled to the grid of third if. amplifier V209. This stage operates with cathode bias developed across resistor R259, which is bypassed by capacitor C282. Resistor R261, bypassed by C283, decreases the screen grid and plate voltage. Tuned coil L227 completes the dc path to the plate (pin 5) of amplifier V209. Resistor R263 and capacitor C286 provide decoupling. Additional decoupling in the +150-volt supply line is provided by low-pass filter FL201. This filter permits the 150-volt B+ output from the power supply to be coupled through feedthrough capacitors C297 and C296 to the 150-volt bus in the if. amplifier subassembly; simultaneously, the filter coil presents a high-impedance input to the 10.7-mc frequencies present in the plate and screen circuits. Bypass capacitors C303, C304, and C305, together with chokes L233 and L234, prevent rf currents from circulating in the heater circuit. A second low-pass filter network, FL202, provides additional protection in assuring that the heater power source is free of residual rf and if. currents. The output of V209 is applied to tuned impedance network Z201. This network consists of tuned coil L227, which resonates with capacitor C284 to the desired center frequency of 10.7 mc. Capacitor C285 is included within the shielded network, and couples the output to fourth if. amplifier V210. Resistor R262, also housed within the shield, is the grid return for V210.

The fourth if. amplifier (V210) operates in an identical manner with V209. The output signal from the tuned impedance network Z202 is coupled to if. cathode follower V211.

d. If. Cathode Follower V211 (fig. 32). A cathode follower is used as the final stage in the if. amplifier subassembly. This stage is identical in circuit components with the if. cathode follower in tuning units 2, 3, and 4. Therefore, the following circuit description is applicable to all if. cathode followers, with differences indicated in the chart that follows the circuit analysis.

(1) The function of the if. cathode follower is to supply driving power to the detectors in the detector and electrometer circuit from a low-impedance source.

(2) A pentode-type 6BJ6 tube is used as the if. cathode follower; since the screen grid, the suppressor grid, and the plate are externally connected together, the tube functions like a triode. The if. signal from the final if. amplifier is coupled to the grid of the triode. The resistor housed within the impedance network of the final if. amplifier functions as the grid return. Cathode bias is employed; the bias resistor is bypassed by a capacitor. A tuned coil is in series with the cathode bias network to chassis ground. This coil is adjusted during if. amplifier alignment to develop maximum signal output.

(3) The common junction of the screen grid, the suppressor grid, and the plate is bypassed to ground through a capacitor. Plate voltage is applied from the filtered 150-volt bus through a dropping resistor.

(4) The heater circuit is decoupled from the 6.3-volt ac power source by a filter capacitor and rf choke.

(5) The rf voltage developed across the cathode tuned coil is applied to a connector plug on the rear partition of the if. amplifier subassembly. This connector plug mates direct with input jack J1 on the detector and electrometer assembly.

(6) The following chart summarizes the differences between the if. cathode followers in tuning units 2, 3, and 4.

Component	Tuning unit 2	Tuning unit 3	Tuning unit 4
If. cathode follower	V211	V410	V512
Grid input parasitic suppressor	None	R462	R584
Cathode bias resistor	R271	R463	R585
Cathode bypass capacitor	C293	C488	C593
Plate voltage-dropping resistor and bypass capacitor	R272 and C294	R464 and C491	R586 and C594
Plate decoupling network	R269 and C295	R459 and C492	R581 and C603
Heater decoupling circuit	C306 and L235	C489 and L432	C609 and L542
Tuned cathode inductance	L229	L431	L535
Output connector	P212	P413	P514

41. Detector and Electrometer Assembly A201 (fig. 19)

All tuning units use an identical sealed detector and electrometer assembly. Each assembly receives driving power from the if. amplifier, separates the signal into separate audio and dc metering signal channels, and applies output signals to the appropriate circuits in the main unit. These sealed assemblies are interchangeable with each other and perform the functions described in detail for detector and electrometer assembly A1 within tuning unit 1 (para 32 and 33).

42. Block Diagram of Tuning Unit 3

The block diagram for tuning unit 3 is shown in figure 27. For complete circuit details, refer to figure 101.

a. Rf Amplifier V401. Rf amplifier V401 is a low-noise amplifier. It amplifies the rf input signal from connector P401 on the tuning unit and delivers its output to crystal mixer CR401.

b. Oscillator V402. The oscillator generates a signal which is always 42 mc above the incoming signal. Its output is also coupled to crystal mixer CR401.

c. Crystal Mixer CR401. The signals from rf amplifier V401 and from oscillator V402 are mixed in this stage. Sum and difference frequencies are obtained. The stage is tuned to the difference frequency of 42 mc; therefore, all other frequencies are suppressed. The difference frequency of 42 mc is applied to cascode driver-amplifier V403.

d. 42-Mc If. Preamplifier. The 42-mc if. preamplifier consists of three stages.

(1) *Cascode Amplifier V403.* Cascode amplifier V403 consists of two halves of a dual triode: the cascode driver section, and the grounded grid amplifier section. This stage amplifies the 42-mc if. frequency and transformer-couples the output to first if. amplifier V404.

(2) *If. Amplifier V404.* The signal from cascode amplifier V403 is increased in amplitude and peaked to 42-mc by first if. amplifier V404.

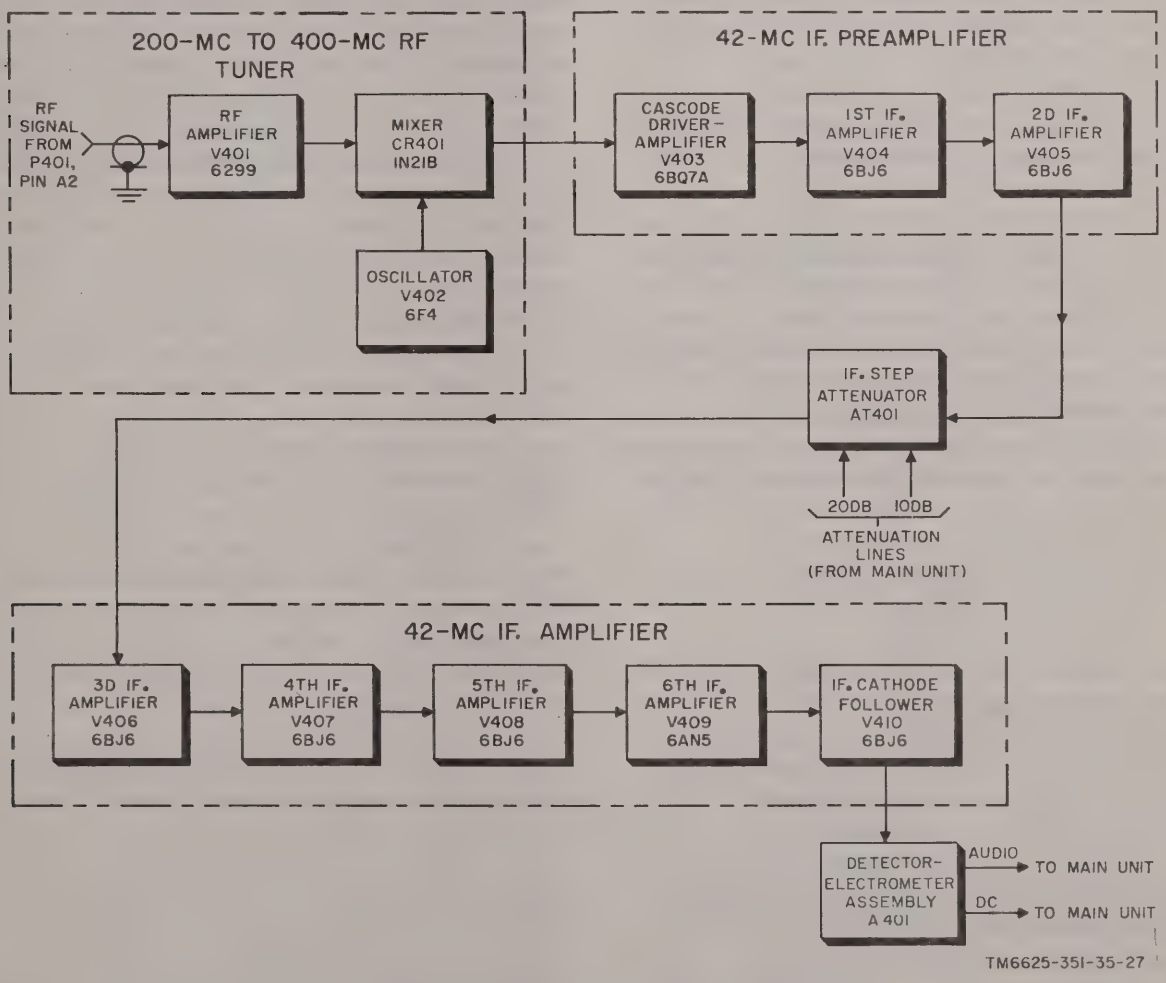

Figure 27. Tuning unit 3, block diagram.

(3) *If. Amplifier V405.* Further signal gain and selectivity are increased by coupling the output of V404 to if. amplifier V405. Its output is transformer-coupled to the input of if. step attenuator AT401.

e. If. Step Attenuator AT401. The if. attenuator is a ladder network with a minimum insertion loss of 6-db and two additional steps of 10-db and 20-db. Since the 6-db loss is always in the system, the effect that is that of a three-position attenuator with steps of 0, 10, and 20-db. The amount of attenuation introduced is controlled by the position of wafer switch S701, located in the main unit. The output from if. step attenuator AT401 is fed to the input of the 42-mc if. amplifier.

f. If. Amplifiers V406 through V409. If. amplifier V406 receives the output of the if. step attenuator and couples the attenuated signal to the following three stages for further gain and selectivity. Each stage is tuned to 42-mc.

g. Cathode Follower V410. Cathode follower V410 is used to obtain a low-impedance source to feed detector and electrometer assembly A401.

h. Detector and Electrometer Assembly. This assembly is identical in function and parts to the interchangeable detector and electrometer used in tuning units 1 and 2 (para 25*j* and 41). The electrometer stages present a high impedance to the signal from the meter detector. Therefore, no signal loss is made in coupling the detected peak or average envelope voltage to cathode follower V702 in the main unit.

43. RF Amplifier V401, Detailed Analysis (fig. 28, 68, and 69)

The signal voltage from the main unit is coupled to rf amplifier V401. A type 6299 grounded grid triode amplifier of planar electrode construction is used because of its low-noise characteristic. The right side of the rf tuner is separated from the left side by a grounded center partition (fig. 69). The amplifier tube is housed within the rf tuner (right side) which is divided into two sections (B, fig. 69) by a grounded partition. This partition separates the tuned cathode input circuit from the tuned plate output circuit. The tuned plate and cathode circuits add gain and selectivity to the rf amplifier. The entire rf tuner, which houses the rf amplifier, the local oscillator, and the crystal mixer, is shockmounted within the tuning unit. The rubber pads of the shockmounts absorb vibrational effects and prevent spurious interference that might be introduced by microphonics of the local osillator.

a. Input Signal Path. The parts location diagram for tuning unit 3 (fig. 68) shows that the signal voltage from terminal A2 on multipin connector P401 is coupled through connector plug P402 and right-angle adapter CP401 to the input of rf filter FL401. This selective frequency filter has a bandpass characteristic which corresponds to the 200-400-mc frequency range of the tuning unit. Other uhf frequencies, such as television channels and military communication channels in the adjacent spectral region are effectively blocked from entering the rf amplifier input circuit. The output of filter FL401 is applied through right-angle adapter CP402 to coaxial cable assembly W401. Connector plug P406, which terminates cable assembly W401, couples the signal to mating jack J405 at the input to the rf tuner subassembly (B, fig. 69). The signal is fed to a tuned circuit which consists of the closely coupled rf input coils, L401 and L402.

b. Amplifier Circuit (fig. 28 and 69). The tuned cathode input circuit consists of pickup loop L402, trimmer capacitor C401, and variable capacitor C402 which is worm-gear driven by the front panel TUNING control. Variable capacitor C402 is mechanically coupled to plate-tuning capacitor C404 and to oscillator-tuning capacitor C413. Therefore, the amplifier and the oscillator track over the complete frequency range. The low rf potential side of the cathode inlut tuned circuit is bypassed by C403. The amplified rf voltage in the plate is developed across the parallel-tuned circuit, which consists of tuning capacitor C404 and pickup loop L404. Trimmer capacitor C405 is adjusted during alignment to obtain a peak output signal

from the amplifier plate circuit at the 400-mc high-frequency end of the band.

(1) The dc path for applying B+ voltage to the plate of the amplifier is unconventional because the plate of the coplanar triode is located on the left side of the grounding partition (A, fig. 69) in the rf tuner. The dc path consists of the following circuit elements:

(a) The voltage set by the arm of V401 ADJ control R405 (an alignment adjustment control) is fed to fixed resistor R402, which is mounted on the rear of the rf tuner (A, fig. 69). The low potential terminal of R402 is connected to the protruding terminal of feedthrough capacitor C410.

(b) This feedthrough capacitor bypasses rf currents to the grounded rf tuner chassis and conducts the plate voltage through the chassis to the interior of the cathode input circuit.

(c) A wire lead conducts the B+ potential to a second feedthrough capacitor, C409 (B, fig. 69), which is mounted through the grounded partition which separates the cathode input circuit from the plate output circuit.

(d) Resistor R401 is connected from the plate side of C409 to bypass capacitor C406. This network decouples the rf amplifier stage from the B+ power supply.

(e) Rf choke L406 adds to the decoupling network by offering a high impedance to frequencies in the uhf spectrum, and applies the B+ potential to the center of pickup loop L404, which is part of the plate tuned circuit.

(f) A metallic bar to which L404 is mounted completes the dc path to the plate of the rf amplifier tube.

(2) The ac path for applying 6.3-volt heater voltage to the filament of the rf amplifier is also unusual because the heater voltage lead must be brought into the right side of the rf tuner through the center partition. The ac heater path consists of the following circuit elements:

(a) The 6.3-volt ac line continues from the if. preamplifier subassembly to rf choke L414, which is mounted between an insulated tie-point terminal on the rear of the rf tuner (A, fig. 69) and the inner conducting terminal of feedthrough capacitor C411, which bypasses rf currents to ground.

(b) The inner conducting terminal of C411 penetrates the rear of the rf tuner and applies the ac voltage through rf choke L408 to a second feedthrough capacitor, C407. This feedthrough element penetrates the upright center partition which serves as a mounting surface for the three tuning capacitors, C402, C404, and C413 (B, fig. 69). Feedthrough capacitor C407 further filters the 6.3-volt ac power supply.

(c) The inner conducting terminal of C407 connects the ac heater voltage to an rf choke, L407, which is connected in series with the electron tube heater. A metallic clip connects the 6.3-volt ac voltage to the cylindrical heater electrode which protrudes from one end of the electron tube. The heater return circuit to chassis ground is completed within the tube envelope by the common heater and the cathode ring. The ring is connected to the tuned cathode input LC circuit, which consists of pickup loop L402 and tuning capacitor C402. Series coil L403 completes the 6.3-volt ac circuit to rf tuner chassis ground.

(3) The rf output of amplifier V401 is inductively coupled to crystal diode CR401 through coils L404 and L405.

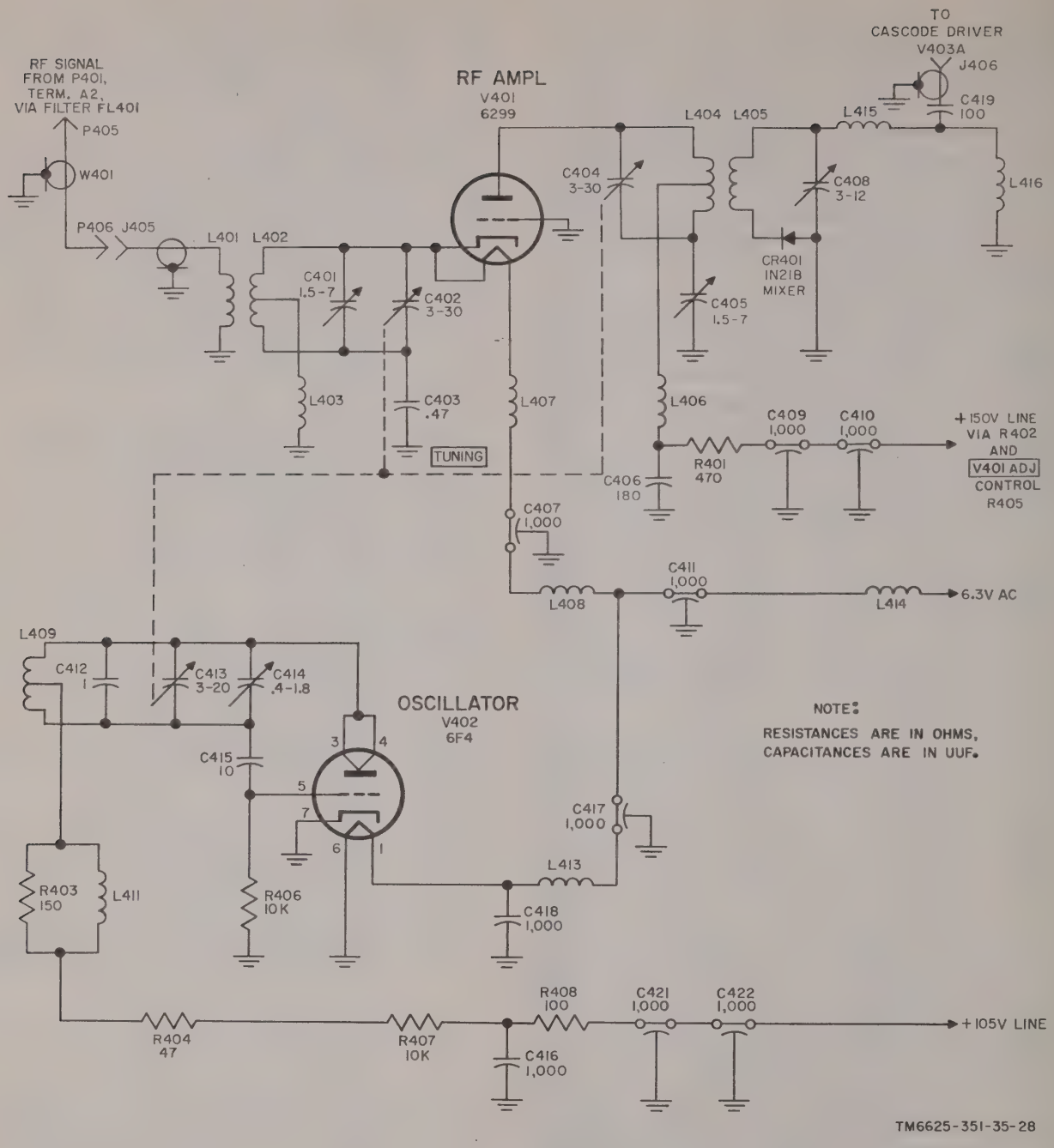

Figure 28. Tuning unit 3 rf amplifier and oscillator, schematic diagram.

44. Oscillator V402, Detailed Analysis (fig. 28 and 69)

A tuned plate oscillator which employs an acorn, type 6F4 (V402), generates an rf frequency which is 42-mc higher than the input signal frequency. The oscillator is tuned by capacitor C413, which is mechanically coupled to C402 and C404 in the rf amplifier cathode input and plate output circuits. Oscillations are developed in the V402 tuned path circuit which consists of coil L409, fixed capacitor C412, tuning capacitor C413, and trimmer capacitor C414. Feedback from the plate (pins 3 and 4) to the grid (pin 5) is made through capacitor C415. Resistor R406 is the grid

resistor. Coil L411, which is wound on resistor R403, functions as a parasitic suppressor. Plate voltage is filtered by resistors R404, R407, and R408, together with bypass capacitor C416. Feedthrough capacitors C421 and C422 are best described by reference to the physical view of the rf tuner (fig. 69).

a. +105-Volt Dc Power Path. The dc path for applying +105-volts to the plate of oscillator V402 consists of the following circuit elements:

(1) The +105-volt bus is connected to the rear of the rf tuner (A, fig. 69) by a wire lead which connects to the inner conductor of the feedthrough bypass capacitor, C422.

(2) An insulated lead connects the +105-volt bus from C422 to a second feedthrough capacitor, C421. This capacitor penetrates the upright center partition which serves as a mounting surface for the three variable tuning capacitors, C402, C404, and C413.

(3) Decoupling resistor R408 (B, fig. 69) connects the dc voltage to the high-potential terminal of rf bypass capacitor C416. The dc voltage continues through the series-connected decoupling resistors, R407 and R404, and rf choke L411, to the 1/4-inch wide loop of brass strapping mounted to the frame of C413. This strapping functions as a high Q inductor for the oscillator at the ultra-high frequencies employed in tuning unit 3.

b. 6.3 Volt Ac Path. The ac path for applying 6.3-volt ac voltage to the heater of the oscillator tube consists of feedthrough capacitor C417, rf choke L413, and bypass capacitor C418. This decoupling circuit is physically located within the rf tuner (B, fig. 69) as follows:

(1) A parallel path is provided inside the rf tuner for heater voltage distribution. One path is through rf choke L408 for heater voltage (para 43*b*(2)) to rf amplifier V401. A second path is provided by the insulated lead which connects the heater voltage from feedthrough C411 to feedthrough capacitor C417. Rf choke L413 and bypass capacitor C418 prevent rf currents from circulating in the heater supply circuit.

(2) Feedthrough capacitor C417 penetrates the upright center partition on which tuning capacitors C402, C404, and C413 are mounted. The inner conductor of the feedthrough capacitor connects the heater voltage to oscillator V402 heater (pin 6). The second heater (pin 1) is connected to the rf chassis ground to complete the heater circuit path.

c. Oscillator Power Signal Path. The frequency generated across oscillator coil L409 (B, fig. 69) in V402 plate-to-grid circuit is inductively coupled to the crystal diode pickup coil L405. This coil is physically located so that it is also within the magnetic field surrounding the rf amplifier plate circuit inductor loop, L404.

45. Crystal Mixer Circuit, Detailed Analysis (fig. 28)

The incoming rf signal and the oscillator output signal are mixed in this stage. The signal from rf amplifier plate inductor L404 is inductively coupled to mixer pickup loop L405. The signal from oscillator-tuned circuit L409, physically located about 1 inch away from mixer pickup loop L405 (B, fig. 69), is also within the magnetic field of L405 and inductively couples the oscillator signal to the crystal mixer circuit. The nonlinear characteristics of a crystal diode, CR401, are untilized for the heterodyning process because of the favorable signal-to-noise ratio obtained at the high frequencies encountered in the 200-400-mc frequency range of tuning unit 3. The diode produces a number of frequencies at its output circuit. Two of these are the sum and difference frequencies produced by the mixing process. Since pickup coil L405 and trimmer capacitor C408 are resonated to 42-mc, the difference frequency is passed through output coils L4-15-L416 and coupling

capacitor C419 to output jack J406. Coaxial cable assembly W402 feeds the output signal to the 42-mc if. preamplifier.

46. If. Preamplifier, Detailed Analysis (fig. 29 and 30)

A three-stage 42-mc preamplifier is used to increase the signal output of the tuner before application to the if. step attentuator. This preamplifier consists of one cascode driver-amplifier stage and two if. voltage amplifiers. Connector J407 on the if. preamplifier chassis couples the incoming signal from the rf tuner to the primary of if. transformer T401. The secondary of transformer T401 is connected to the grid (pin 2) of cascode driver V403A. Capacitor C423 resonates with the secondary of T401 at the intermediate

a. Cascode Driver V403A. A triode cascode driver is used because it is a low-noise stage, which is desirable for low-level input signals. Its low input impedance matches the low output impedance of the coupling circuit, which consists of if. transformer T401. The amplified output of the driver is coupled through capacitor C427 to the cathode of grounded-grid cascode amplifier V403B. Cathode bias is developed by the voltage drop across R410, which is bypassed by C426. Part of the amplified voltage across plate load resistor R411 is coupled back to the grid by capacitor C425 and neutralizing coil L417. These components are utilized to prevent the triode from oscillating. Resistor R411 and capacitor C480 provide decoupling for the plate circuit. The bifilar wound coils, L419A and L419B, together with bypass capacitor C448 and choke L421, decouple the heater circuit from the 6.3-volt ac supply.

b. Cascode Amplifier V403B. The second half of triode V403 operates as a grounded-grid amplifier. The rf input voltage is developed across coil L418. Cathode bias is developed by the voltage drop across R413, which is bypassed by C428. Resistor R412 serves as a parasitic suppressor in the plate circuit. Resistor R415, in shunt with if. tuned network Z401, forms the plate load. Resistor R417, bypassed by capacitor C432, is the B+ voltage-dropping resistor. Resistor R421 and capacitor C433 decouple the plate from the B+ line. The 42-mc rf output of Z401 is fed to first if. amplifier V404 through C431, which is housed within the shielded tuned network.

c. First and Second If. Amplifiers V404 and V405 (fig. 29 and 30). Two pentode if. amplifiers, similar in circuit analysis, increase the signal amplitude developed by cascode amplifier V403B. Since the two stages are similar, the following description applies to both stages, with the exceptions noted below:

(1) Cathode bias for the first if. amplifier, V404, is developed by the voltage drop across R419, which is bypassed by C434. Cathode bias for the second if. amplifier, V405 (fig. 30), is developed by the voltage drop across R427, which is bypassed by C441.

(2) First if. amplifier grid resistor R418 is connected by feedthrough capacitor C447 to the front-panel GAIN control, R466. Resistor R465 GAIN control R466 serve as a voltage divider to develop bias voltage. The setting of the GAIN control for this stage affects the total gain of both the preamplifier and the five-stage if. amplifier (para 48). Second if. amplifier grid resistor R426 is connected by feedthrough capacitor C446 to a voltage divider consisting of R467 and R468. This voltage divider develops the fixed bias for the second if. amplifier.

(3) The first if. amplifier screen resistor R422, is bypassed by C435, and the second amplifier screen resistor, R429, is bypassed by C442.

(4) The first if. amplifier plate load consists of R423 shunted by the tuned network, Z402. Resistor R425, which is bypassed by C437, decreases the plate voltage. The second if. amplifier, the plate load, consists of if. transformer T404. Resistor R432, which is bypassed

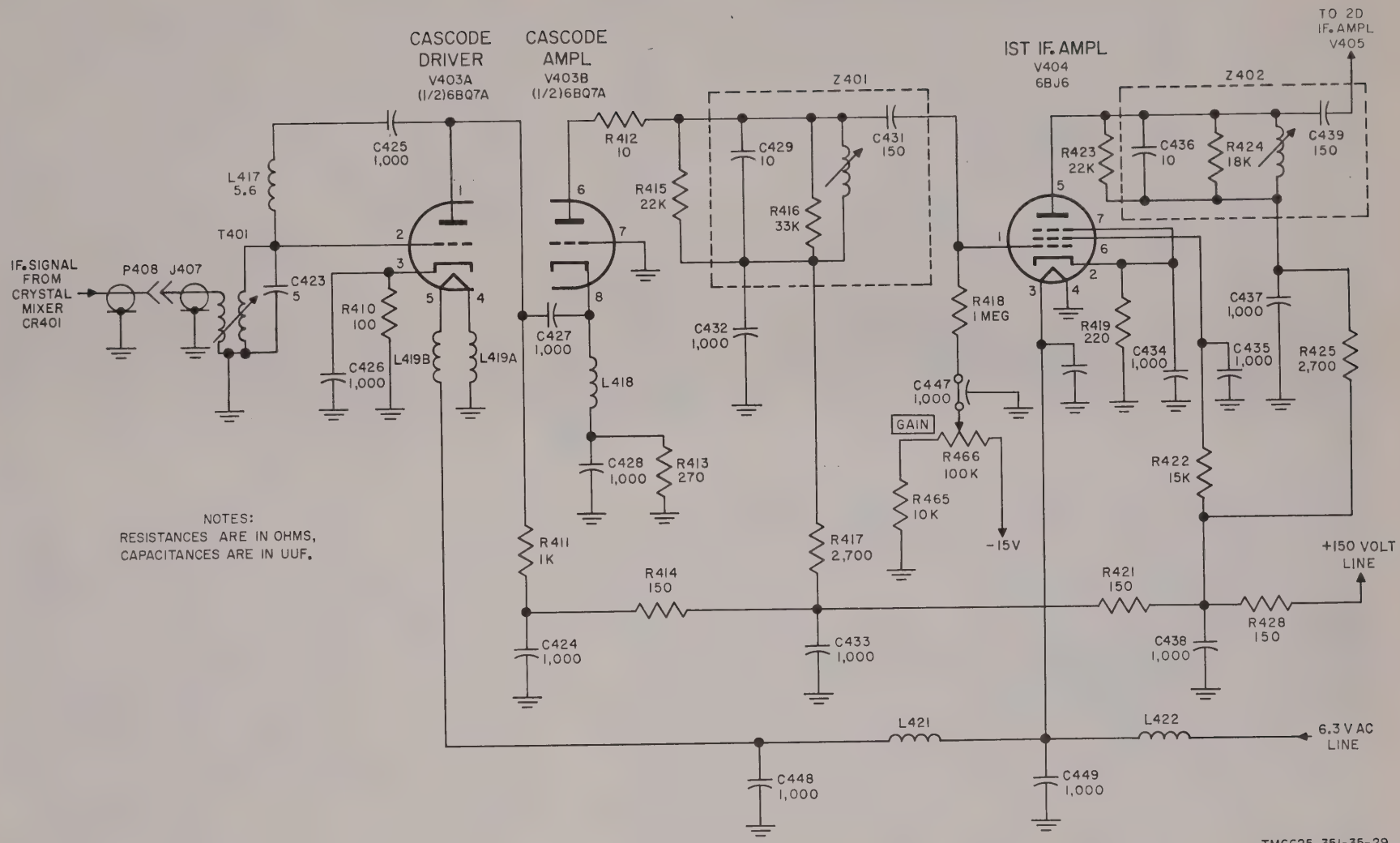

Figure 29. Tuning unit 3, if. preamplifier, schematic diagram.

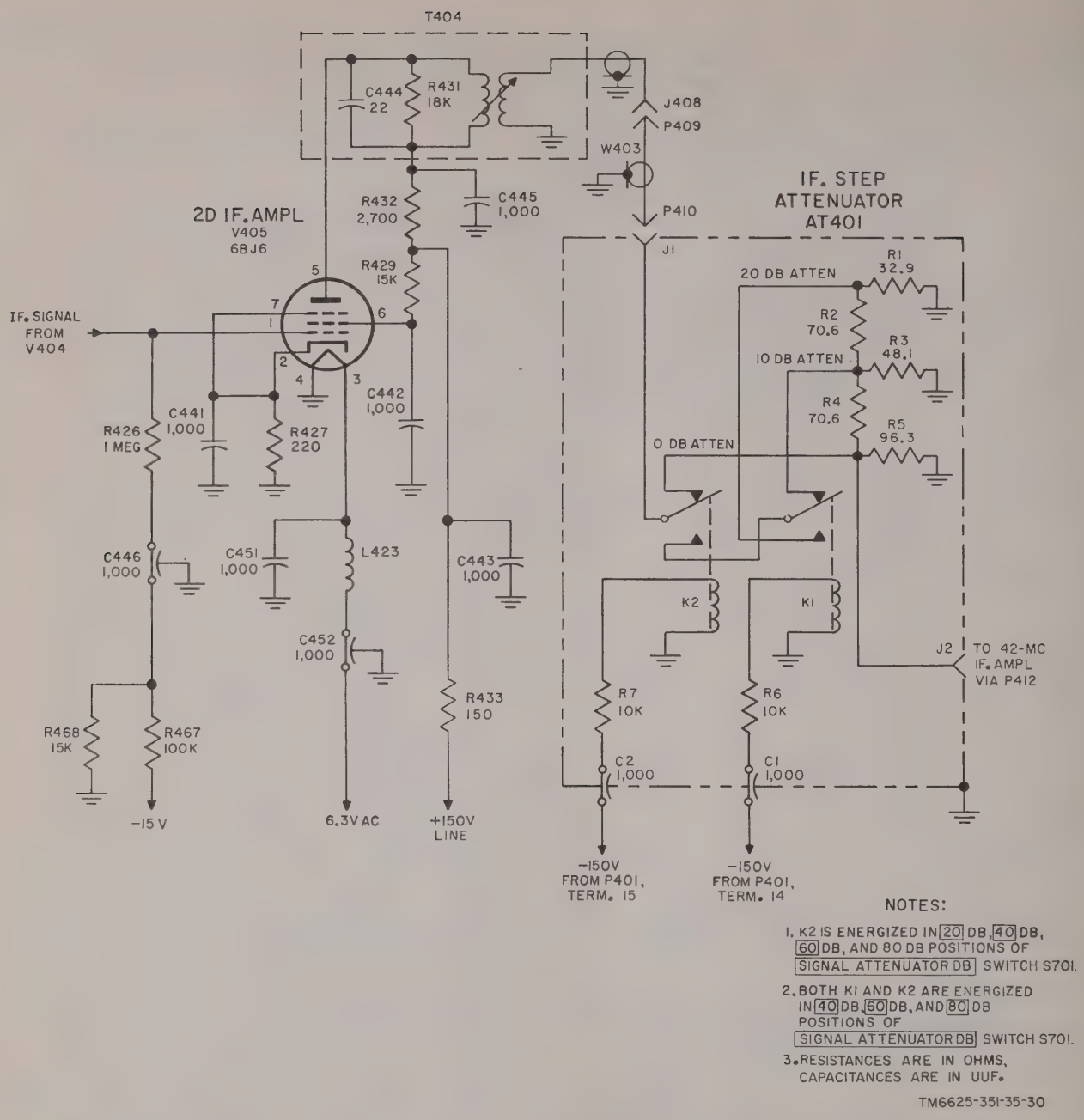

Figure 30. Tuning unit 3, second if. amplifier V405 and if. step attenuator, schematic diagram.

by C445, decreases the plate voltage.

(5) Resistor R428 and capacitor C438 provide decoupling in the first if. amplifier plate circuit. Resistor R433 and capacitor C443 provide decoupling in the second if. amplifier plate circuit.

(6) The first if. amplifier rf output is coupled to second if. amplifier V405 by C439. The second if. amplifier output is coupled direct from the plate to the primary winding of if. transformer T404, which is resonated to 42-mc by parallel-connected capacitor C444. Resistor R431 functions as a loading resistor to lower the Q of the tuned circuit. The secondary winding of T404 has a 50-ohm output impedance to maintain a low standing wave ratio to output jack J408, the

output termination of the if. preamplifier subassembly. Coaxial cable assembly W403, with a characteristic impedance of 50 ohms, conducts the amplified output signal to the input of if. step attenuator AT401.

47. If. Step Attenuator AT401 (fig. 30)

The output of the 42-mc if. preamplifier is coupled through connector plugs P409 and P410, part of coaxial cable assembly W403, to input jack J1 on the if. step attenuator subassembly. This circuit is identical and interchangeable with the if. step attenuator previously described for tuning unit 2 (para 39). The attenuated if. signal is available at output jack J2 on the if. step attenuator subassembly for coupling through connector plug P412 to the input of the 42-mc if. amplifier subassembly.

48. If. Amplifier, Detailed Analysis (fig. 31 and 32)

The 42-mc if. amplifier subassembly houses interstage transformer T405, four amplifiers V406 through V409 operating at a center frequency of 42-mc, and a low-output impedance cathode follower, V410 which supplies driving power to the audio and meter detectors within detector and electrometer assembly A401.

a. Interstage Transformers T405 (fig. 31). The attenuated if. signal at connector AT401J2 on the if. step attenuator is conducted through connector plug P412 and a length of coaxial cable, to the primary winding of interstage transformer T405. The primary winding has a 50-ohm impedance. The secondary winding and shunt capacitor C453 resonate together at the intermediate frequency, with R434 functioning as a load resistor. The transformer T405 secondary is connected to the grid of third if. amplifier V406.

b. If. Amplifiers V406 through V408. Since the first three if. amplifiers are essentially the same, with identical values of circuit elements in their respective electrodes, the following circuit description for V406 is also applicable to V407 and V408 (fig. 101). The only difference is the use of a 50-ohm impedance-matching transformer at the input to V406.

(1) Cathode bias is developed by the voltage drop across R435 in the third if. amplifier (fig. 31). Cap-

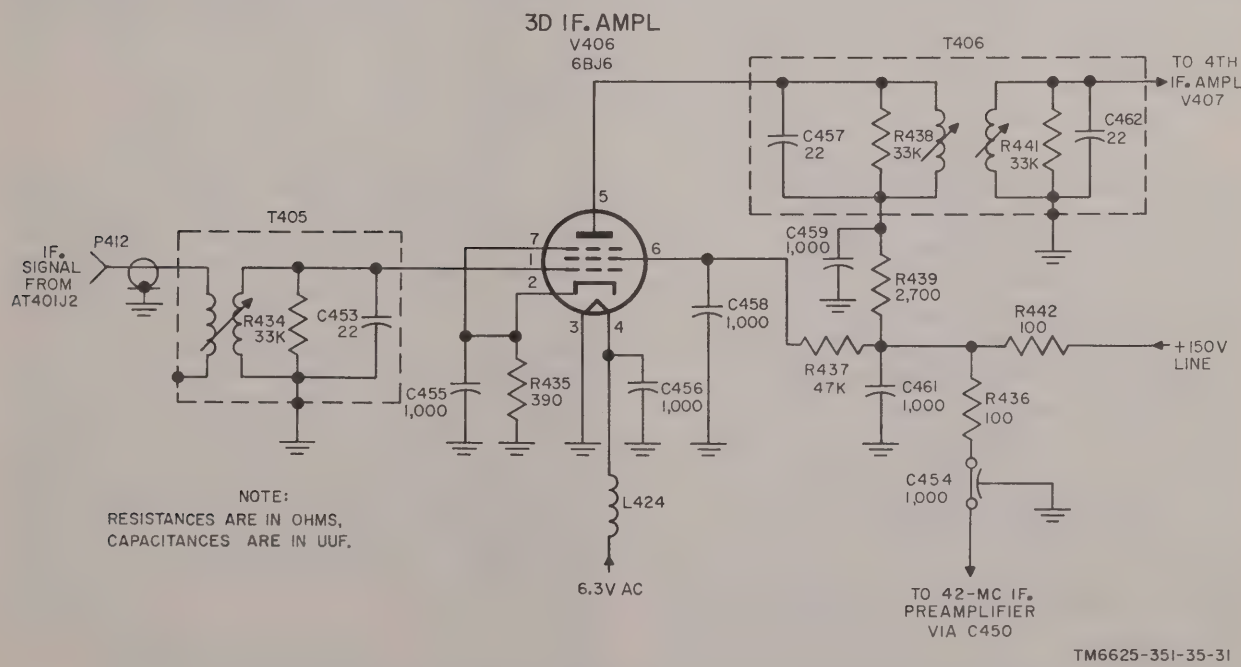

Figure 31. Tuning unit 3, third if. amplifier V406, schematic diagram.

acitor C455 is the cathode bypass capacitor.

(2) The control grid dc return path is through the parallel network of R434 and the secondary winding of if. transformer T405.

(3) B+ voltage for the screen and plate is fed from the 150-volt line through decoupling resistor R422 and bypass capacitor C461 to the junction of R437 and R439. Resistor R437 is the screen voltage-dropping resistor which is bypassed by C458. Resistor R439 is the plate voltage-dropping circuit is bypassed by C459. The third if. amplifier is coupled by T406 to the fourth if. amplifier, V407.

(4) A parallel path for feeding B+ voltage to the 42-mc if. preamplifier is connected to the low-potential side of R442. A second decoupling resistor, R436, connects the 150-volt line through the feedthrough bypass capacitor, C454, to the if. preamplifier subassembly.

(5) The 6.3-volt ac heater voltage is applied to the underground heater

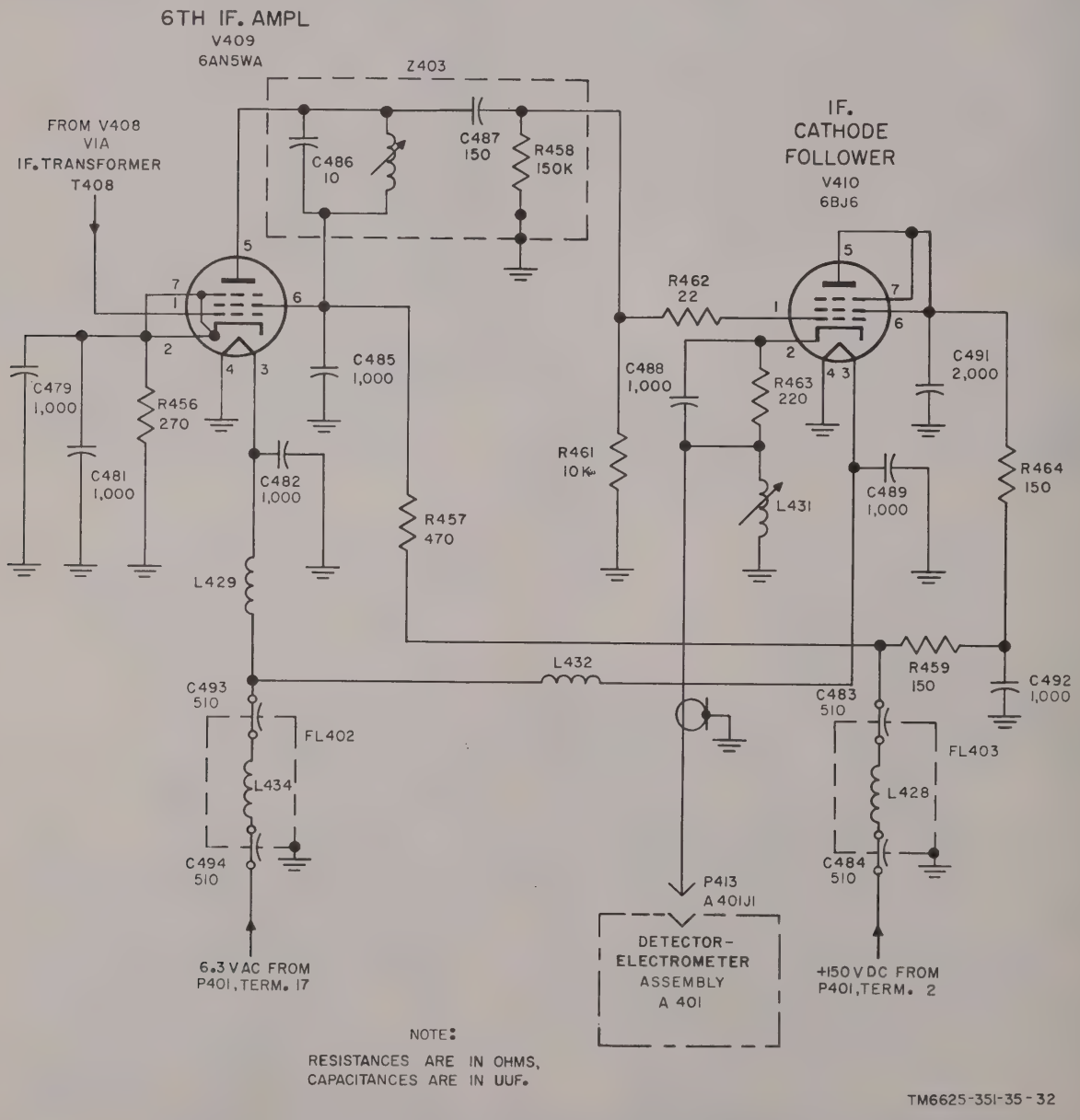

Figure 32. Tuning unit 3, sixth if. amplifier V409 and cathode follower V410, schematic diagram.

(pin 4) through a decoupling network which consists of rf choke L424 and bypass capacitor C456.

c. If. Amplifier V409 (fig. 32). The amplified if. signal at the output of V408 is inductively coupled to the control grid of if. amplifier V409. This stage is essentially similar to the first three if. amplifier stages (*b* above), but differs in its tuned plate circuit. The tuned network, Z403, in the output of the final if. amplifier, is single tuned. No set-up transformation is required because of the signal gain produced by the previous amplifier stages. Except for the lower value of cathode bias resistor R456 and the plate- and screen-dropping resistor, R457, the circuit description is identical with that of if. amplifiers V406 through V408. The heater circuit of V409 uses an additional decoupling network which isolates the 6.3-volt ac line from the if. and rf currents circulating in the tuning unit. This additional decoupling network consists of filter FL402, which consists of a metallic cylinder enclosing rf choke L434. The choke is encased within the metallic cylinder which penetrates the top side of the if. amplifier subassembly. The outer shield of the filter is soldered to the grounded surface of the wall. Feedthrough capacitor C494 accepts the 6.3-volt ac voltage from the heater bus. Choke L434 serves as a low-pass filter for powerline frequencies and a high rejection filter for intermediate frequencies. The 6.3-volt ac is connected through feedthrough capacitor C493 to the junction of decoupling coils L429 and L432.

d. If. Cathode Follower V410 (fig. 32). Detailed circuit analysis of the if. cathode follower, which is identical in tuning units 2, 3, and 4, appears in the description of tuning 2 (para 40*d*). The cathode follower is the final stage in the if. amplifier, which supplies driving power from a low-impedance source to the detectors in the detector and electrometer assembly A401.

49. Detector and Electrometer Circuit A401 (fig. 19)

All tuning units employ an identical sealed detector and electrometer assembly. Each circuit accepts driving power from the if. amplifier, detects the signal in separate audio and dc metering signal channels, and applies output signals to the appropriate circuits in the main unit. These sealed assemblies are interchangeable with each other and perform the functions described in detail for detector and electrometer circuit A1 within tuning unit 1 (para 32 and 33).

Section VI. THEORY OF TUNING UNIT 4

50. Block Diagram for Tuning Unit 4

The block diagram for tuning unit 4 is shown in figure 33. For complete circuit details, refer to figure 102.

a. Rf Tuners. Two separate rf tuners are employed in this tuning unit to house the transmission-line types of rf amplifiers and oscillators. One tuner covers the frequency spectrum from 700- to 1,000-mc; another covers the spectrum from 400- to 700-mc. The signal path through each tuner is similar and is described as follows:

(1) *Tuner, 700-1,000.* With FREQUENCY RANGE-MC switch S503 set to 700-1,000-mc, first rf amplifier V501 receives the incoming rf signal which is coupled from the main unit to coaxial switch S501. A path of continuity is created through the coaxial switch to the double-tuned cavity in the input side of V501. The amplified output of V501 present in its plate cavity is coupled to a silicon diode crystal mixer. Simultaneously, the rf energy circulating in the oscillator cavity is coupled to the mixer. The oscillator generates a signal that tracks 42-mc higher than the incoming rf signal. The mixer stage heterodynes the rf incoming signal with the oscillator signal;

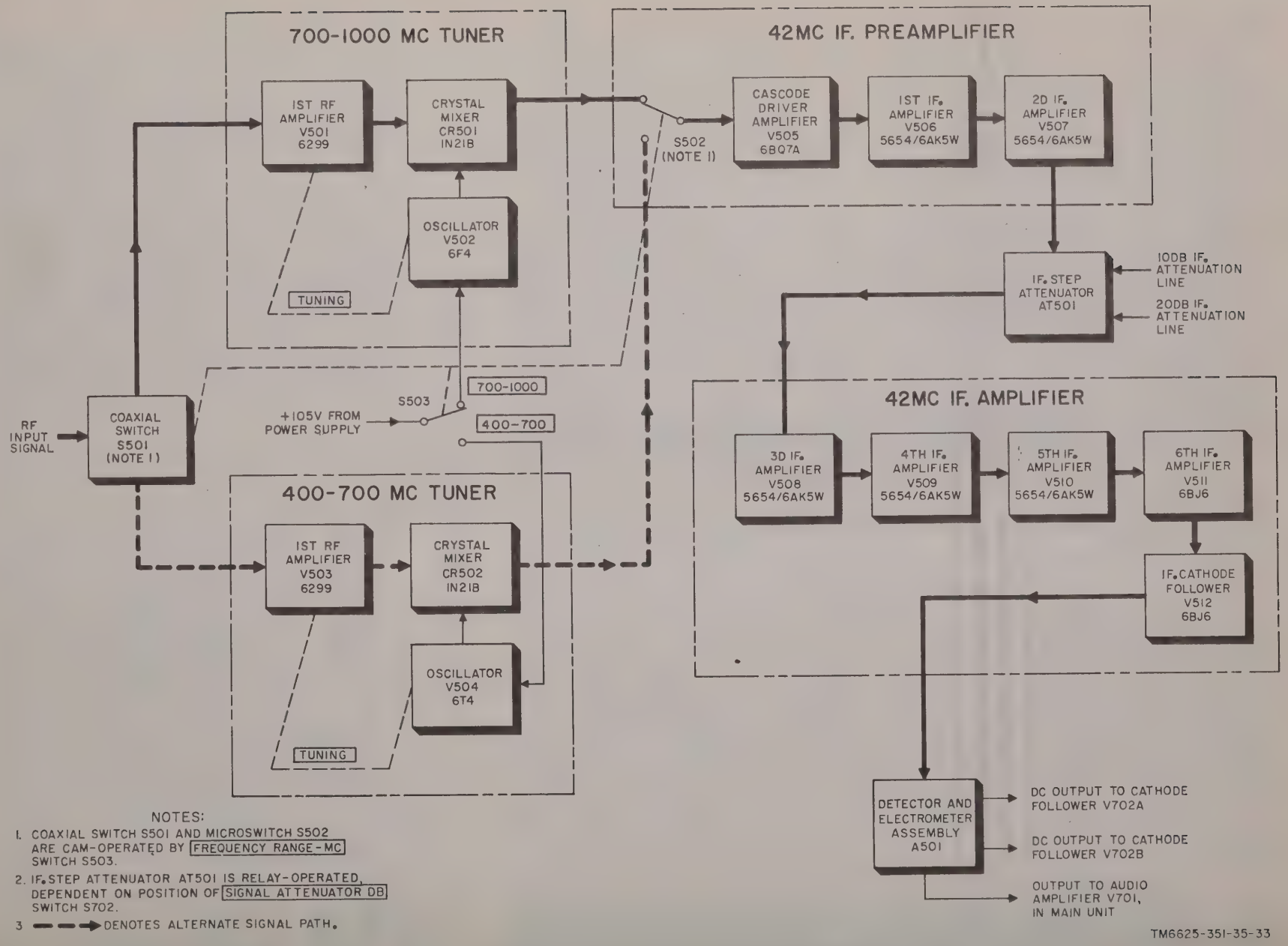

Figure 33. Tuning unit 4, block diagram.

this produces a difference frequency output that is coupled through microswitch S502 to the 42-mc if. preamplifier. The microswitch, housed within the 42-mc if. preamplifier, is plunger actuated by a cam on the shaft of FREQUENCY RANGE-MC switch S503.

(2) *Tuner, 400-700 mc.* The 400-700-mc tuner functions indentically with the 700-1,000-mc tuner, except that FREQUENCY RANGE-MC switch S503 must be set to the lower frequency band for its operation. Rf amplifier V503, crystal mixer CR502, and oscillator V504 serve the same purposes as described in (1) above for the 700-1,000-mc tuner, with the oscillator also tracking 42-mc above the incoming rf signal.

(3) *B+ switching.* The B+ voltage for the first rf amplifiers in either rf tuner is not disconnected when the tuner becomes inoperative. The design of the type 6299 planar electron tube does not permit operation with heater power applied and plate voltage disconnected. For this reason, both rf amplifiers V501 and V503 are energized, regardless of the position of FREQUENCY RANGE-MC switch S503. However, B+ voltage is switched on to the operative oscillator and removed from the inoperative oscillator to assure that only one heterodyned signal can pass to the if. amplifier channel.

b. 42-MC If. Preamplifier. The 42-mc if. preamplifier consists of three stages that function identically with the if. preamplifier in tuning unit 3 (para 42*d*) in all respects but one. The only difference between the if. preamplifier in tuning units 3 and 4 is the inclusion of a microswitch at the input to the tuning unit 4 if. preamplifier. This microswitch creates a path of continuity from the energized rf tuner to the first stage of the preamplifier, which is cascode driver-amplifier V505; simultaneously, the microswitch breaks the path of continuity to V505 from the deenergized rf tuner.

c. If. Step Attenuator AT501. If. step attenuator AT501 is a ladder network with a minimum insertion loss of 6-db and two additional steps of 16-db and 26-db. Since the 6-db loss is always in the system, the effect is that of a three-position attenuator with steps of 0, 10, and 20 db. The amount of attenuation introduced is controlled by the position of SIGNAL ATTENUATOR DB switch S701, located in the main unit. Output from if. step attenuator AT501 is fed to the input of the 42-mc if. amplifier.

d. If. Amplifiers V508 through V511. If. amplifier V508 receives the output of the if. step attenuator and couples the attenuated signal to three additional stages. Each stage is tuned to a center frequency of 42-mc.

e. If. Cathode Follower V512. If. cathode follower V512 provides a low-impedance source to feed the amplified signal from the final if. amplifier stage to the detector and electrometer assembly A501.

f. Detector and Electrometer Assembly. This assembly is identical in function and parts with the interchangeable detector and electrometer assemblies used in tuning unit 1 (para 25*j*), tuning unit 2 (para 41), and tuning unit 3 (para 42*h*).

51. Rf Tuner, 700-1,000 Mc, Introduction (fig. 34)

The signal voltage from the main unit is fed to coaxial switch S501, which is controlled by the front-panel band selector. With the band selector rotated to the 700-1,000-mc position, the signal voltage is conducted from the coaxial switch by cable assembly W502 and its connector plug P506 to mating jack J506 on the exterior of the rf tuner assembly.

a. Physical Description (fig. 34, 72, and 74). A combined physical-electrical diagram of the rf tuner (fig. 34) shows that rf amplifier V501 and oscillator V502 are housed in a chassis containing four tuned coaxial-type cavities and two rectangular compartments. The chassis is constructed

with relatively thick walls to provide a high degree of mechanical stability and electrical isolation. Three covers (fig. 72) are secured to the chassis; one cover is secured to the side of the chassis, and a second cover is secured to the end of the tuner housing the variable capacitor plates. These two covers provide proper shielding against rf leakage for the amplifier cavities, the oscillator cavity, and the compartment that houses voltage-dropping resistor R505 in the oscillator plate circuit. The third cover is secured to the compartment that houses crystal diode CR501 and crystal mixer coil L505. An access hole is provided at the top of the cover to permit factory adjustment of the tuning shaft for a flat frequency response over the band. Reference to the parts location diagram (fig. 74) shows that four feedthrough capacitors (C502, C505, C540, and C511), a right-angle input signal connector (J506), and a termination (CP501) are inserted through the chassis walls for purposes described in *b* below.

b. Circuit Analysis, Static Condition. The rf tuner consists of six separately confined but functionally interrelated circuits, with operating voltages for the tube electrodes applied as described below:

(1) *Amplifier circuit.* The amplifier circuit uses a grounded-grid coplanar triode, V501 (A, fig. 74), which is secured to the partition that separates the cathode cavity from the plate cavity. A screw is used to transfer spring pressure from a metallic clamp to the grid disk of the electron tube; this assures a secure electrical contact. Since the clamp, the partition, and the electron tube grid are always at rf ground potential, the need for neutralization of the amplifier input circuit is avoided. Simultaneously, the possible generation of spurious and undersided frequencies is kept to a minimum.

(a) Heater voltage (6.3 volts) ac is connected from the power supply through rf choke L509, feedthrough capacitor C502, and rf choke L502 to one of the heater pins. The return path for heater voltage is through rf choke L501 to chassis ground. Chokes L501, L502, and two decoupling networks (consisting of choke L524-bypass capacitor C531 and choke L545-bypass capacitor C530, shown on the overall schematic diagram (fig. 102)), effectively prevent rf currents from circulating in the heater supply.

(b) Since the plate current of the type 6299 tube must be limited to a maximum of 10 milliamperes, V501 ADJ control (fig. 34) is provided for making adjustments. Rf choke L521 applies the 150-volt output of the power supply to one terminal of variable resistor R503, which is mounted on the tuning unit frame assembly (fig. 74). The variable arm of R503 is in series with choke L504 to feedthrough capacitor C505, which penetrates the cavity wall and connects the B+ potential to the compartment that houses the crystal diode. A wire lead connects C505 to the junction of R502 and feedthrough capacitor C504. This capacitor serves only as a convenient tie point for anchoring one terminal of R502. Because of the voltage drop across R502, a lower value of B+ potential is applied through feedthrough capacitor C503 to the plate of V501. Rf choke L503 wound on R501, presents a high impedance to rf currents entering the B+ power supply line.

(2) *Oscillator circuit.* The oscillator circuit uses an acorn-type triode (V502) which is mounted by its radiating pins to supporting structures within the oscillator cavity (A, fig. 74). The plate (pins 3 and 4) is secured to an adjustment nut which is anchored to one of the two parallel 1/2-wavelength capacity-loaded transmission lines in the cavity. The grid (pins 3 and 5) is secured to a second adjustment nut

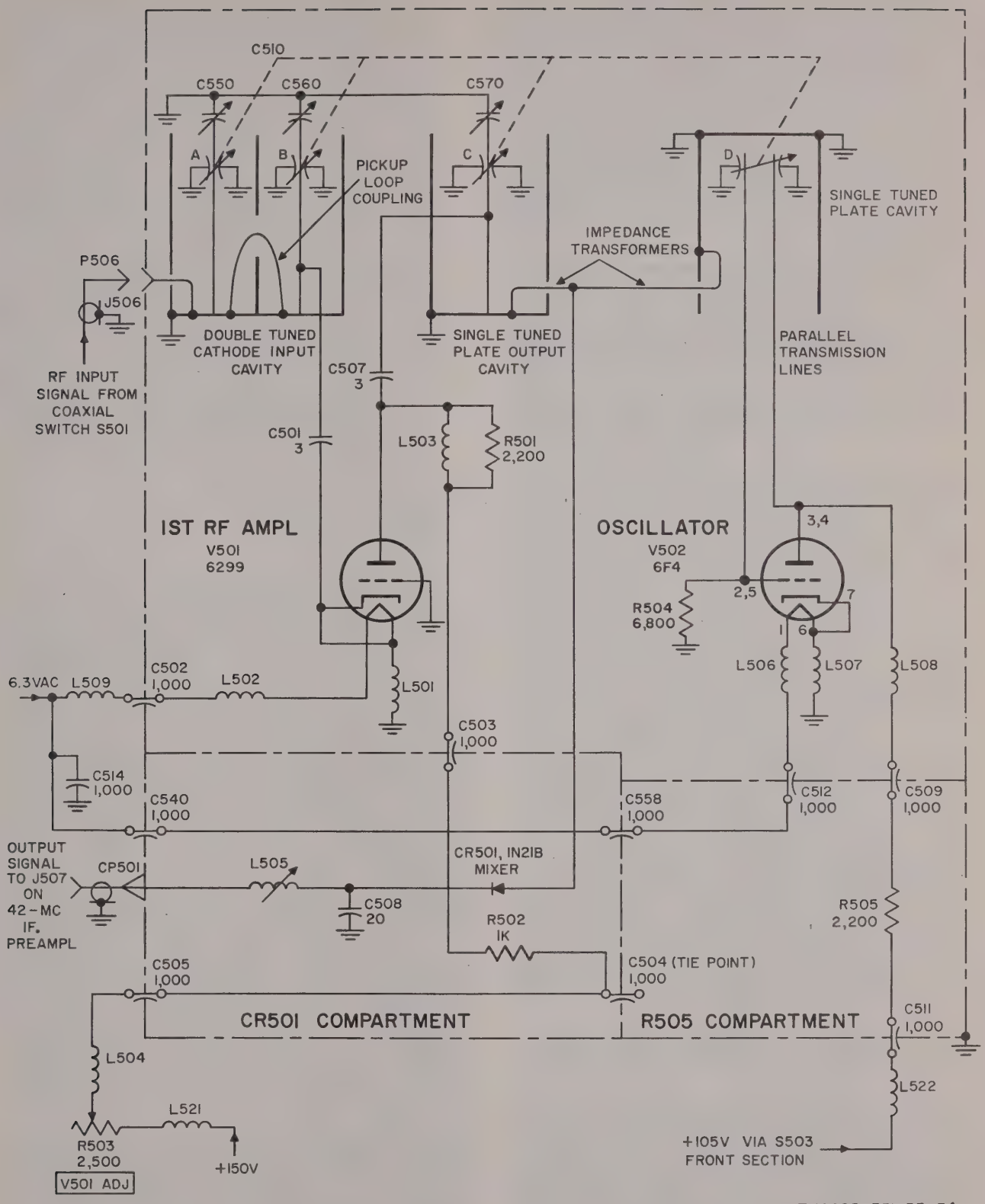

Figure 34. Tuning unit 4, rf amplifier and oscillator (700-1,000 mc), simplified schematic diagram.

which is anchored to the second parallel 1/2-wavelength transmission line. Pins 2 and 3 of the tube are not used. The heater (pins 1 and 6) and the cathode (pin 7) are secured to supporting metallic clamps which prevent mechanical vibration and provide secure electrical contact to the following potentials required for tube operation:

(a) Heater voltage is connected from the power supply through feedthrough capacitor C540, which penetrates the chassis wall that encloses the crystal diode CR501) compartment. A wire lead conducts the heater voltage to a second feedthrough capacitor, C558, which is inserted through the common wall that separates the crystal diode compartment from the fixed resistor R505 compartment (fig. 34). A second wire lead continues the conduction path to the inner terminal of feedthrough capacitor C512, which isolates the 6.3-volt heater line from the grounded wall and is connected to rf choke L506, which is mounted within the oscillator cavity. Choke L506 is connected to the heater (pin 1) of V502. The 6.3-volt return path is through pin 6 of V502 and rf choke L507 to chassis ground.

(b) The bias for oscillator V502 is developed by the voltage drop across grid resistor R504. The cathode (pin 7) has a dc return path to chassis ground through rf choke L507.

(c) The B+, 105-volt dc potential is applied to the plate of the oscillator tube only when the band selector is rotated to the 700-1,000-mc position. This potential is applied through two rf chokes and two feedthrough capacitors. The first choke, L522, is outside of the tuner chassis and is in series with the switch terminal on band selector S503 that applies B+ potential to oscillator V502. Feedthrough capacitor C511 penetrates the exterior chassis wall that encloses the resistor R505 compartment (A, fig. 74). The B+ voltage is reduced by R505 to the proper value for tube operation. The low-potential terminal of R505 is connected to feedthrough capacitor C509. This capacitor serves two functions: it penetrates the interior wall that separates the R505 compartment from the oscillator cavity; it simultaneously bypasses rf currents in the B+ supply to chassis ground. The B+ voltage is applied through rf choke L508 to the plate (pin 4) of the oscillator tube.

52. Rf Tuner, 700-1,000 Mc, Dynamic Circuit Analysis (fig. 34)

The rf incoming signal is applied to a double-tuned quarter-wavelength shorted coaxial line type of cavity at the input to rf amplifier V501. The signal is increased in magnitude by the amplifier and is fed to a single-tuned quarter-wavelength shorted coaxial line type of cavity in the plate output circuit of V501. An impednace-matching transformer couples the plate cavity signal into crystal mixer CR501. An oscillator which uses a tuned half-wavelength parallel transmission line also injects its signal into the crystal mixer input. As a result of heterodyning action within the crystal mixer, sum and difference frequencies are produced. Since the if. preamplifier is tuned to the difference frequency, this heterodyned signal is passed on to the if. amplifiers for amplification, and to the detector and electrometer circuit for metering and audio signal detection.

a. V501 Input Circuit. The incoming signal is coupled into the first coaxial-type cathode input cavity at an area of low rf impedance. A pickup loop is used to transfer the rf energy from the first to the second tuned cavity. Effectively, the tuned cavities function as a double-tuned rf

transformer, with optimum coupling between primary and secondary windings. The lengths of the coaxial lines in the input circuit are chosen to resonate (together with the tube interelectrode capacitances) in the 700- to 1,000-mc frequency range. Section A of tuning capacitor C510 loads the first coaxial line and provides the required tuning range; section B of capacitor C510 serves the same function for the second cavity. For vernier tracking of the amplifier with the oscillator, a metallic tab is positioned between the grounded wall of the coaxial-type cavity and the stator plates of tuning capacitor C510, sections A and B. Varying the position of the tab, with reference to the stator plates, permits trimming the high-frequency end of the tuning range during alignment procedures. Capacitor C550 is the trimmer tab capacitor for the first input cavity; C560 is the trimmer for the second input cavity. Energy transfer from the second cavity to the cathode of the grounded-grid amplifier is obtained by coupling capacitor C501, which is connected between the stator plates of tuning capacitor C510B and the conductive tube clip that supports the cathode of amplifier V501.

b. V501 Output Circuit. The amplified rf signal at the plate of amplifier V501 is coupled from the conductive metallic tube clip that secures the plate of the tube through a second tubular capacitor, C507, to the stator plates of tuning capacitor C510, section C. This section of the cavity, which includes the plate of the amplifier and capacitor section C510C, constitutes the third shorted coaxial line of 1/4-wavelength tuning range. Similar to the first two tuned cavities (*a* above), C510C loads the single-tuned coaxial line and provides a tuning range from 700- to 1,000-mc; C570 is the trimmer tab capacitor provided for alignment at the high-frequency end of the band. A loop, positioned near the low rf impedance area in the tuned cavity, injects the amplified rf signal into the crystal mixer CR501 input circuit. This loop functions as an impedance-matching transformer to match the input impedance of diode CR501, which is in the order of 200- to 300-ohms.

c. V502 Oscillator Circuit. A capacity-loaded half-wavelength pair of parallel transmission lines is used in the oscillator circuit. The lines are connected between the plate and grid of V502 and are properly dimensioned to sustain oscillations over the required tuning range, which is 42-mc higher than the incoming rf signal. Section D of tuning capacitor C510, mechanically ganged with the amplifier sections, provides the tracking frequency range from 742- to 1,042-mc. Because of the constructional difference between the amplifier and oscillator tuned lines, no metallic trimmer tab capacitor is required for the oscillator circuit. A loop, positioned in the oscillator cavity, functions as an impedance-matching transformer to inject oscillator voltage into the input circuit of crystal mixer CR501.

d. Crystal Mixer Circuit. The nonlinear characteristics of a crystal diode, CR501, are utilized for the heterodyning process because of the favorable signal-to-noise ratio obtained at the ultrahigh frequencies of tuning unit 4. The diode produces a number of frequencies at its output. These are the two original signal and oscillator frequencies (tracked 42-mc apart), and their sum and difference frequencies. Crystal mixer coil L505 is resonated to 42 mc and the if. preamplifier circuit is pretuned to 42 mc; therefore, only the difference frequency is passed through output termination CP501 and a short length of coaxial cable to connector jack J507 on the 42-mc if. amplifier subassembly. All other frequencies are bypassed to ground through capacitor C508, which is connected to the input terminal of signal peaking coil L508 within the crystal diode compartment of the rf tuner.

53. Rf Tuner, 400-700 Mc, Introduction (fig. 35)

With the front-panel band selector rotated to the 400-700-mc position, the signal voltage from the main unit is connected from coaxial switch S501 by cable assembly W503 and its connector plug P508 to mating jack J508 on the exterior of the 400-700-mc rf tuner.

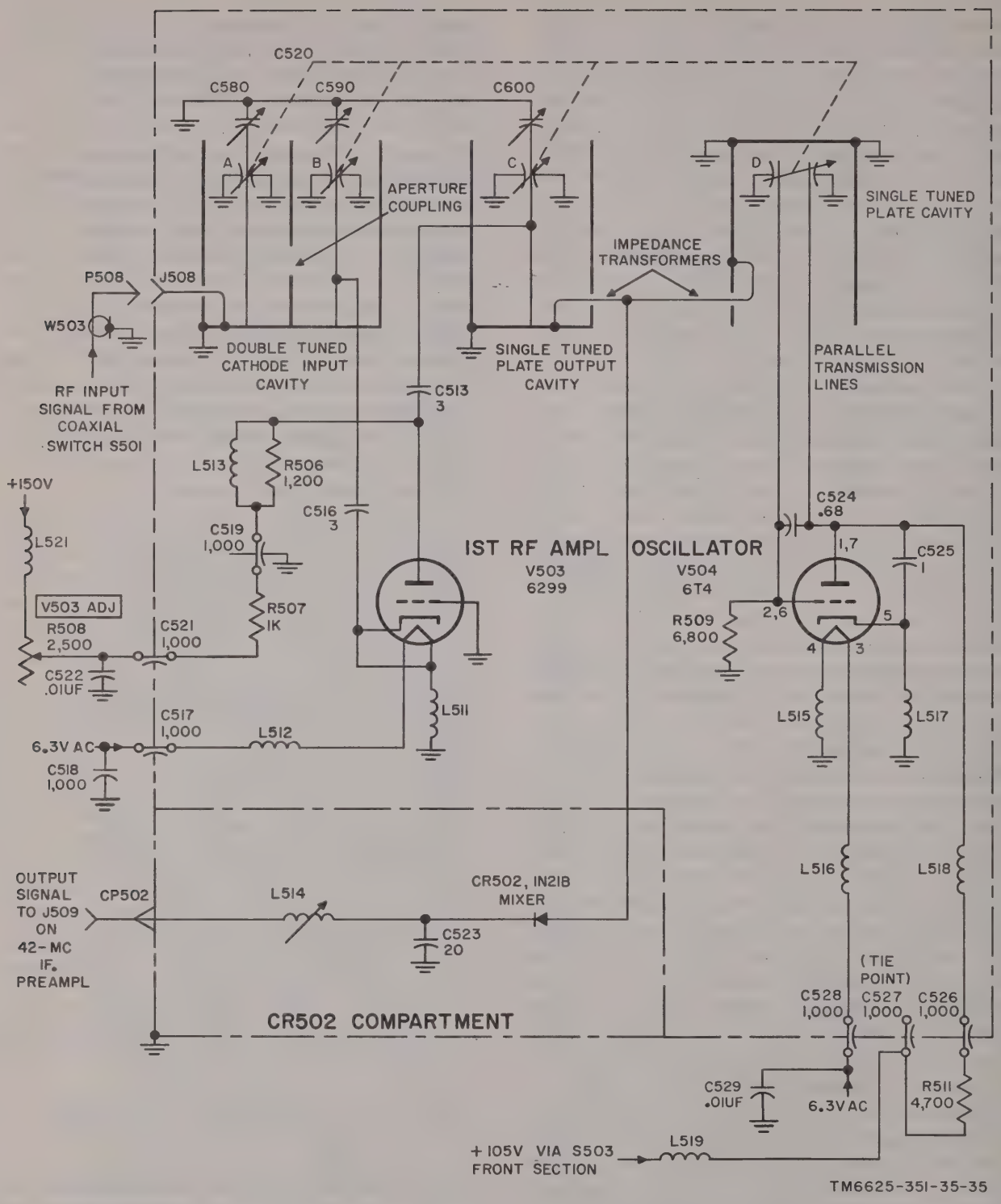

Figure 35. Tuning unit 4, rf amplifier and oscillator (400-700 mc), simplified schematic diagram.

a. Physical Description (fig. 35, 72, and 73). While many similarities exist between the 400-700-mc tuner and the 700-1,000-mc tuner (para 51*a*), the physical construction of the two chassis is sufficiently different to warrant separate physical

descriptions. A combined physical-electrical diagram of the 400-700-mc tuner (fig. 35) shows that rf amplifier V503 and oscillator V504 are housed in a chassis that contains four tuned coaxial-type cavities and one rectangular compartment. This chassis is also constructed with relatively thick walls to provide mechanical stability and electrical isolation. Two covers (fig. 72) are secured to the chasis. One is snugly secured to the exterior side and provides shielding against rf leakage for the amplifier cavities and the oscillator cavity. A second cover, of Z-shape construction, is secured to the compartment that houses crystal diode CR502 and crystal mixer coil L514. The tuning slug of the mixer coil projects through a vertical wall of the crystal diode compartment; this slug is factory set for a flat frequency response over the band. Reference to the parts location diagram (fig. 73) shows that five feedthrough capacitors (C517, C521, C526, C527, and C528), a right-angle input signal connector (J508), and a termination (CP502) for the output signal cable are inserted through the tuner walls for purposes described in *b* below.

b. Circuit Analysis, Static Condition. The 400-700-mc rf tuner consists of five separately confined but functionally interrelated circuits with operating voltages for the tube electrodes applied as follows:

(1) *Amplifier circuit.* Similar to the 700-1,000-mc tuner (para 51*b*(1)), the amplifier circuit uses a grounded-grid coplanar triode, V503 (fig. 35 and 73). The grid disk is secured to the grounded partition that separates the cathode input cavity from the plate output cavity; this avoids the need for neutralization of the amplifier input circuit and minimizes the generation of spurious frequencies.

(a) Heater voltage is connected from the power supply, through feedthrough capacitor C517 (B, fig. 73) and rf choke L512, to one of the heater pins. The return path for the heater voltage is through rf choke L511 to chassis ground. Feedthrough capacitor C518 decouples rf currents in the heater circuit from the power supply.

(b) The plate current of the type 6299 amplifier tube must be limited to a maximum of 10 milliamperes to prolong the life of the coplanar triode tube. Variable resistor R508, designated V503 ADJ, is provided for this adjustment. Rf choke L521 applies the +150-volt output of the power supply to one terminal of R508, which is mounted outside of the cavity on the tuning unit frame assembly (fig. 72). Capacitor C521 penetrates the cavity wall and connects the B+ potential through voltage-dropping resistor R507 (B, fig. 73) to feedthrough capacitor C519, which is mounted on a supporting bracket (A, fig. 73) in the plate cavity. The bracket serves as a convenient anchoring point for one terminal of rf choke L513, which is wound on R506. The second terminal of rf choke L513 is soldered to the underside of the metallic tube clip which supports amplifier tube V503 within the cavity. Rf choke L513 connects the B+ potential to the plate electrode of V503 and offers a high impedance to rf currents in the plate circuit. Capacitor C513, of tubular construction, is also soldered to the underside of the plate tube clip, and offers a low-impedance path for rf energy to pass to the tuned plate output cavity.

(2) *Oscillator circuit.* The oscillator consists of a miniature-type 6T4 triode connected to two parallel 1/2-wavelength capacity-loaded transmission lines (A, fig. 73). The length of the parallel transmission lines must be greater than those in the 700-1,000-mc tuner so that resonance can be obtained over the 400-700-mc tuning range. For this reason, the large-envelope

acorn-type electron tube cannot be utilized, and a smaller envelope-type 6T4 tube is employed. Operating potentials are applied to the terminals at the base of the tube socket as follows:

(a) Heater voltage is connected from the power supply through feedthrough capacitor C528 (A, fig. 73) which penetrates the oscillator compartment. Bypass capacitor C529 decouples rf energy in the heater circuit from the heater power supply line. A short length of wire connects the heater voltage through rf choke L516 to one side of V504 heater (pin 4). The heater voltage return path is through rf choke L515 to chassis ground.

(b) Grid bias for oscillator V504 is developed by the voltage drop across grid resistor R509. The cathode (pin 5) is connected through rf choke L517 to chassis ground.

(c) The 105-volt dc potential is applied to the plate (pins 1 and 7) of the oscillator tube *only* when the front panel band selector (S503) is rotated to the 400-700-mc position. The dc potential is applied through two rf chokes, two feedthrough capacitors, and one resistor. The first choke, L519, is outside of the rf tuner and in series with terminal 2 on band selector S503 (front section) which applies B+ potential to V504. Feedthrough capacitor C527 penetrates the chassis; however, this capacitor serves only as a convenient tie point for anchoring one terminal of current-limiting resistor R511 to the exterior of the chassis (A, fig. 73). The B+ voltage is decreased by fixed resistor R511 to the proper value for tube operation. The low-potential side of R511 is connected to feedthrough capacitor C526 which penetrates the exterior wall of the oscillator cavity and serves as an rf bypass. The B+ voltage is applied through rf choke L518 to the plate (pins 1 and 7) of the oscillator tube and to one of the 1/2-wavelength parallel transmission lines in the oscillator plate circuit. The second parallel transmission line operates at dc ground potential.

54. Rf Tuner, 400-700 Mc, Dynamic Circuit Analysis (fig. 35)

The dynamic circuit analysis for the 400-700-mc rf tuner is identical with that for the 700-1,000-mc tuner (para 52) except for substitution of applicable reference symbols and the following circuit components:

a. V503 Input Circuit. No pickup loop is employed for coupling the rf energy from the first to the second coaxial-type tuned cavity. Because a pickup loop at the lower frequency range of 400- to 700-mc must be considerably longer than that employed in the upper frequency band (700- to 1,000-mc), undesirable resonances in the tuning range can be created. Instead of a pickup loop, an aperture of proper dimensions for the pass band of the frequencies desired is cut into the wall separating the first and second input tuned cavities. This aperture method of coupling permits ample transfer of rf energy from the first to the second input cavity. Except for the difference in coupling methods, V503 amplifier employs reference symbol C520 as the ganged tuning capacitor. Metallic tab capacitors C580 and C590 permit vernier tracking of the amplifier and oscillator sections of the tuning capacitor.

b. V503 Output Circuit. Section C of tuning capacitor C520 loads the single-tuned coaxial line in the amplifier output circuit. Metallic tab capacitor C600 serves the same functiin as metallic tab capacitor C570 for the 700-1,000-mc rf amplifier.

c. V504 Oscillator Circuit. Section D of tuning capacitor C250, mechanically ganged with amplifier sections A, B, and C of C520, provides the tracking frequency

range from 442- to 742-mc. Because of the greater physical length needed for the two parallel transmission lines, a capacitor (C524) is connected between the transmission lines to electrically lengthen the lines. Capacitor C225, connected between the plate and the cathode, assures sustained oscillation throughout the frequency range.

d. Crystal Mixer Circuit (para 52*d*). The functioning of the crystal mixer circuit is idential with that of the 700-1,000-mc tuner except for the use of reference symbol CR502 as the crystal diode, C523 as the rf bypass capacitor, and L514 as the crystal mixer coil. Cable termination CP502 is used to couple the 42-mc if. output signal through a short length of coaxial cable to connector jack J509 on the 42-mc if. preamplifier subassembly.

55. If. Preamplifier, Detailed Analysis

A three-stage preamplifier is used to increase the signal output from the rf tuner before the signal is applied to the if. step attenuator. This preamplifier, which is identical in function and circuit values with that of tuning unit 3 (fig. 29 and 30), consists of one cascode driver-amplifier stage and two if. voltage amplifiers. Separate connectors at the input to the if. preamplifier receive the incoming signal from the 700-1,000-mc tuner and the 400-700-mc tuner. The position of a microswitch (S502) which is driven by a cam on the band selector switch creates a dc path of continuity from the operating rf tuner to the input cascode driver stage, V505A. Except for this microswitch and the different reference symbols employed, the circuit analysis for this if. preamplifier is identical with that for tuning unit 3 (para 46). The following chart, therefore, points out only the differences in reference symbols between the two if. preamplifiers so that identical functioning parts can easily be located.

Circuit function	Tuning unit 3 if. preamplifier (fig. 29 and 30)	Tuning unit 4 if. preamplifier (fig. 102)
Input connector	J407	J507 and J508.
Input transformer	T401	T501.
Resonating capacitor	C423	C532.
Cascode driver	V403A	V505A.
Output coupling capacitor	C427	C535.
Cathode bias circuit	R410, bypassed by C426	R512, bypassed by C534.
Neutralizing circuit	C425 and L417	C533 and L526.
Plate decoupling circuit	R414, bypassed by C424	R517, bypassed by C533.
Heater decoupling circuit	L419A and B, bypassed by C448	L513A and B bypassed by C561.
Cascode amplifier	V403B	V505B.
Tuned cathode input coil	L418	L527.
Cathode-bias circuit	R413, bypassed by C428	R516, bypassed by C536.
Plate parasitic suppressor	R142	R514.
Plate load	R415, shunted by tuned network Z401.	R515, shunted by tuned network Z501.
Plate voltage-dropping circuit	R417, bypassed by C432	R519, bypassed by C538.
Plate decoupling circuit	R421, bypassed by C433	R524, bypassed by C554.
Output coupling capacitor	C431, within tuned network Z401	C539, within tuned network Z501.
First if. amplifier	V404	V506.
Cathode bias circuit	R419, bypassed by C434	R522, bypassed by C542.
Grid resistor	R418	R521.
GAIN control circuit	R465 and R466	R525 and R526.
Screen-grid voltage-dropping circuit	R422, bypassed by C435	R523, bypassed by C543.
Plate load circuit	R423, shunted by tuned network Z402.	R528, shunted by tuned network Z502.
Plate voltage-dropping circuit	R425, bypassed by C437	R531, bypassed by C545.
Plate decoupling circuit	R428, bypassed by C438	R534, bypassed by C555.
Output coupling capacitor	C439, within tuned network Z402	C546, within tuned network Z502.
Second if. amplifier	V405	V507.
Cathode-bias circuit	R427, bypassed by C441	R533, bypassed by C548.
Grid resistor	R426	R532.
Grid-bias circuit	Voltage divider network R467-R468	Voltage divider network R535-R537.

Circuit function	Tuning unit 3 if. preamplifier (fig. 29 and 30)	Tuning unit 4 if. preamplifier (fig. 102)
Screen-grid voltage dropping circuit	R429, bypassed by C442	R539, bypassed by C549.
Plate load circuit	If. transformer T404	If. transformer T502.
Plate voltage-dropping circuit	R432, bypassed by C445	R542, bypassed by C552.
Plate decoupling circuit	R443, bypassed by C443	R543, bypassed by C556.
Output coupling circuit	If. transformer T404 primary, shunted by C444 and loading resistor R431.	If. transformer T502 primary, shunted by C551 and loading resistor R541.
Output connector	J408, of 50-ohm output impedance, mating coaxial cable assembly W403.	J511, of 50-ohm output impedance, mating coaxial cable assembly W502.

56. If. Step Attenuator AT501

This attenuator is identical and interchangeable with the if. step attenuator previously described for tuning unit 2 (para 39, and fig. 25) and tuning unit 3 (para 47 and fig. 30). The output of the 42-mc if. preamplifier is coupled through connector plugs P511 and P512, at opposite ends of coaxial cable assembly W502, to input jack J1 on if. step attenuator subassembly AT501. The attenuated if. signal is available at output jack J2 on the if. step attenuator subassembly, for coupling through connector plug P513 to the input of the 42-mc if. amplifier subassembly.

57. If. Amplifier, Detailed Analysis

The 42-mc if. amplifier circuit analysis is identical with that for tuning unit 3 (para 48). The following chart, therefore, points out only the difference in reference symbols between the two if. amplifiers so that identical functioning parts can easily be located.

Circuit function	Tuning unit 3 if. amplifier (fig. 101)	Tuning unit 4 if. amplifier (fig. 102)
Interstage transformer	T405, with secondary resonated to 42 mc by C453; loaded by R434.	T503, with secondary resonated to 42 mc by C566; loaded by R544.
Typical (third) if. amplifier stage	V406	V508.
Cathode-bias circuit	R435, bypassed by C455	R546, bypassed by C568; suppressor grid bypassed by C567.
Control grid dc return path	Secondary winding of if. transformer T405, in shunt with R434.	Parasitic suppressor resistor R545, in series with the network consisting of T503 secondary winding and R544.
Plate voltage-dropping circuit	R439, bypassed by C459	R553, bypassed by C571.
Screen-grid voltage-dropping circuit	R437, bypassed by C458	R551, bypassed by C569.
Plate and screen decoupling circuit	R442, bypassed by C461, with additional decoupling obtained through B+ filter FL403.	R555, bypassed by C596, with additional decoupling obtained through B+ filter FL501 and rf choke L547.
Heater decoupling circuit	Rf choke L424 and bypass capacitor C456, with additional decoupling obtained through heater bus filter FL402 and rf choke L433.	Rf choke L537 and bypass capacitor C605, with additional decoupling obtained through heater bus filter FL502 and rf choke L544.
Plate output circuit	Double-tuned if. transformer T406	Parasitic suppressor resistor R548, in series with double-tuned if. transformer T504.
If. cathode follower	V410	V512.
Cathode-bias circuit	R463, bypassed by C488	R585, bypassed by C593.
Signal peaking coil	L431	L535.
Grid resistor	R461	R583.
Plate grid voltage-dropping circuit	R464, bypassed by C491	R586, bypassed by C594.
B+ decoupling circuit	R459, bypassed by C492	R581, bypassed by C603.
Heater decoupling circuit	Rf choke L432 and bypass capacitor C489.	Rf choke L542 and bypass capacitor C609.

Circuit function	Tuning unit 3 if. amplifier (fig. 101)	Tuning unit 4 if. amplifier (fig. 102)
Cathode output circuit----------	Voltage developed across signal peaking coil L431 is present at protruding connector plug P413, which mates direct into jack J1 on detector and electrometer circuit A401.	Voltage developed across signal peaking coil L535 is present at protruding connector plug P514, which mates direct into jack J1 on detector and electrometer circuit A501.

58. Detector and Electrometer Circuit A501 (fig. 19)

All tuning units employ an identical sealed detector and electrometer circuit. Each circuit accepts driving power from the if. amplifier, detects the signal in separate audio and dc metering signal channels, and applies output signals to the appropriate circuits in the main unit. These sealed circuits are interchangeable with each other and perform the functions described in detail for detector and electrometer circuit A1 within tuning unit 1 (para 32 and 33).

Section VII. THEORY OF MINOR COMPONENTS

59. Minor Components for Use with Tuning Unit 1

Five minor components are supplied for use with tuning unit 1. A physical description of these components is given in TM 11-6625-351-12. The following circuit analysis supplement the information contained in TM 11-6625-351-12.

a. Antenna AT-1029/URM-85. This loop antenna (fig. 36) consists of a single turn of wire and a base which houses matching transformers, an injection network for the impulse generator signal, and a band switch to select one of the six bands corresponding in frequency to that inscribed on the front panel of tuning unit 1. The loop itself consists of a single turn of wire enclosed in an electrostatic shield. Therefore, the loop is relatively insensitive to the electric field component of radio energy but is highly responsive to the magnetic field component. Because of the single turn of wire in the loop itself, this antenna has an extremely low-output impedance match.

(1) *Rf signal path.* To match the output impedance of the loop antenna to the red color-coded 50-ohm characteristic impedance of the mating coaxial rf cable, four matching transformers, T1001 through T1004, are used. The transformers, of subminiature construction, are enclosed in ferrite cup cores to obtain proper shielding from stray magnetic fields. The proper step-up ratio is obtained by rotating band switch S1001, at the front of the housing, to the same frequency band in use by tuning unit 1. For band 5 (5.2- to 12.7-mc) and band 6 (12.7- to 30-mc), the loop impedance is close to 50-ohms and no step-up transformer is required.

(2) *Impulse generator signal path.* When the loop antenna over the frequency range of tuning unit 1 is used, calibration of the test set is accomplished by injecting a voltage from the impulse generator in series with the secondary winding of the selected matching transformer. For bands 5 and 6, section C of switch S1001 conducts the impulse generator signal in series with the loop itself. Sections A and B of the switch then provide a dc path to output connector J1001. The impulse generator signal path is from the main unit IMPULSE OUTPUT front-panel jack, through the green color-coded mating rf cable to the injection network built into the green color-coded signal connector J1002. When the calibrating voltage from the impulse generator circuit is injected in series with the incoming rf signal, the calibrating

voltage causes a current to flow through the same circuit path as that of the unknown signal. In this manner, a direct comparison of the amplitude of the rf incoming signal, with reference to the impulse generator signal, is obtained without introducing transformation factors.

(3) *Attenuator pad.* A 20-db attenuator pad, which consists of R1001 and R1002, is always in the path of the impulse generator signal when the loop antenna is used. This attenuation is counterbalanced by the fact that the level of the impulse generator signal is actually 20-db higher than that indicated by the settings of the main unit impulse output coarse and fine controls.

b. Coupler, Antenna CU-890/URM-85 (fig. 37). This vertical antenna base is used to support five series-connected lenghts of Mast Sections AB-21/GR. The vertical antenna base is similar to Antenna AT-1026/URM-85 (*a* above). It houses the matching transformers, and injection network for the impulse generator signal, and a band switch to select one of the six bands corresponding in frequency to that inscribed on the front panel of tuning unit 1.

(1) *Rf signal path.* With the five lengths of Mast Sections AB-21/GR connected to the socket at the top of the vertical antenna base, the impedance of the antenna is high, but varies with the frequency of the incoming rf signal. To match the output of the antenna to the red color-coded 50-ohm impedance mating rf coaxial cable, six matching stepdown transformers, T1101 through T1106, are used. The construction of these transformers is identical with that for those used in the loop antenna (*a*

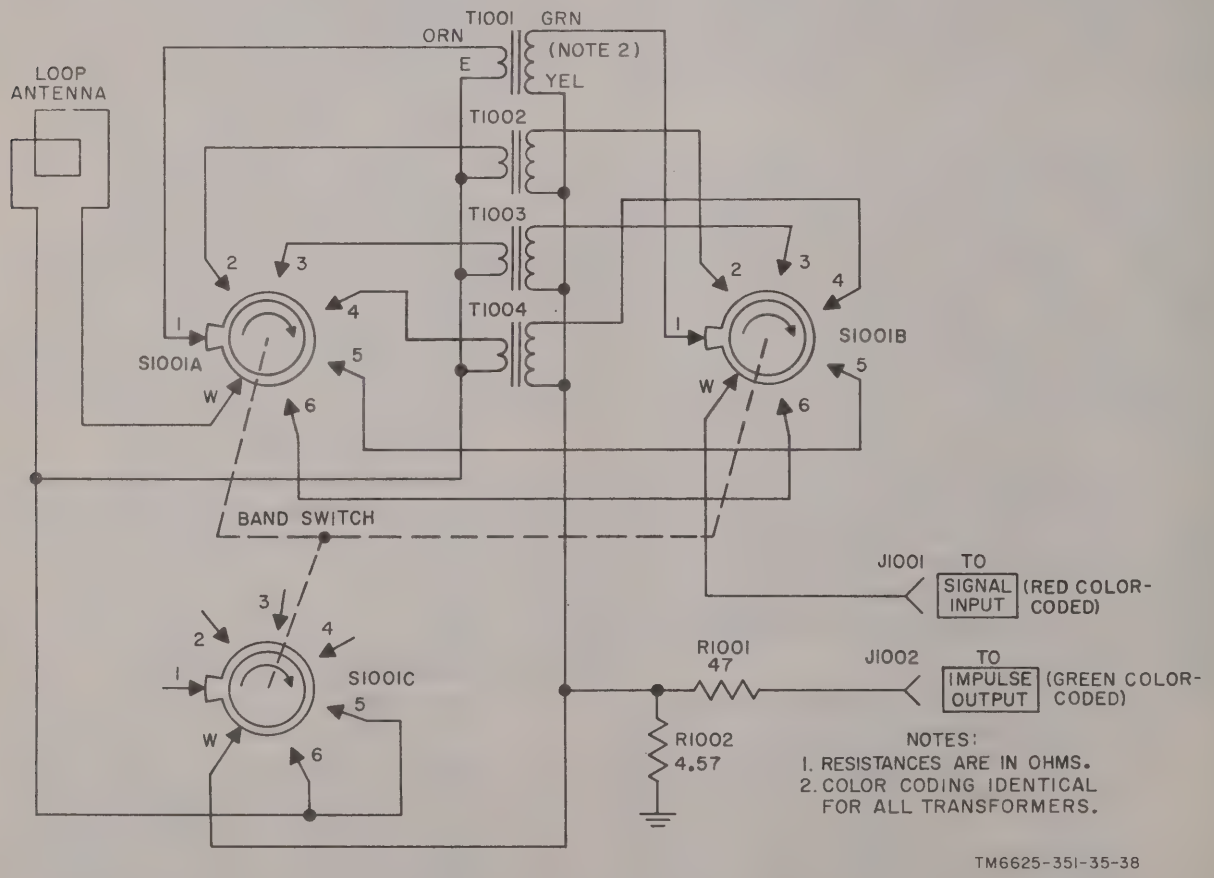

Figure 36. Antenna AT-1026/URM-85, schematic diagram.

(1) above). The proper stepdown ratio is obtained by rotating band switch S1101 at the front of the antenna housing to the same frequency band in use by tuning unit 1.

(2) *Impulse generator signal path and attenuator pad.* When the vertical antenna base with the five series-connected mast sections is used, calibration of the test set is accomplished in the same manner as that described for the loop antenna (*a* (2) above). The attenuator pad, which consists of R1101 and R1102, is housed within connector J1102 and provides 20-db of attenuation to the impulse generator calibrating signal. This attenuation is counterbalanced as described in *a* (3) above.

c. Probe, Magnetic Field, Interference Measuring MX-3409/URM-85 (A, fig. 38). To localize the magnetic field components of rf interference in the 150-kc to 30-mc frequency range, a magnetic field probe is employed. This signal pickup device consists of a 3-inch diameter electrostatically shielded pickup loop at one end of a 9-inch long probe, which is terminated in a modified N-type connector at the opposite end of the probe. Therefore, the loop is insenitive to the electric field component of radio interference signals, but is highly responsive to the magnetic field component. Because of the realtively low frequencies involved as compared with the frequencies encountered in tuning units 2, 3, and 4, a number of turns of wire is required in the loop to induce an output signal of proper amplitude for driving the rf amplifier circuit in tuning unit 1. Connector plug P1301 delivers the signal power through the red color-coded coaxial cable of Cable Assembly Set, Electrical MX-3410/URM-85 to the main unit front-panel SIGNAL INPUT jack.

d. Coupler, Radio Frequency Interference CU-891/URM-85 (D, fig. 38). To conduct rf signals or noise interference signals from 50-ohm impedance two-wire audio-signal or electrical powerlines in the 150-kc to 30-mc frequency range, a capacitive-type pickup device is employed. This coupler consists of a rectangular

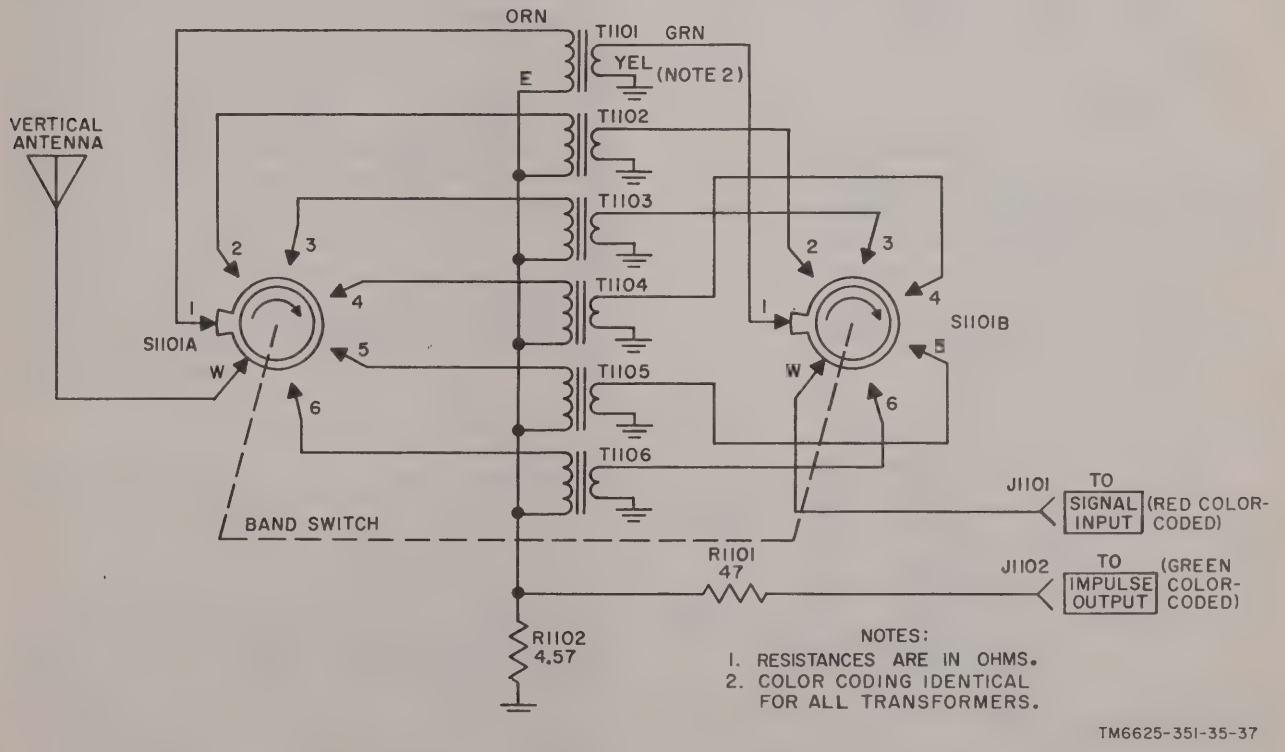

Figure 37. Coupler, Antenna CU-890/URM-85, schematic diagram.

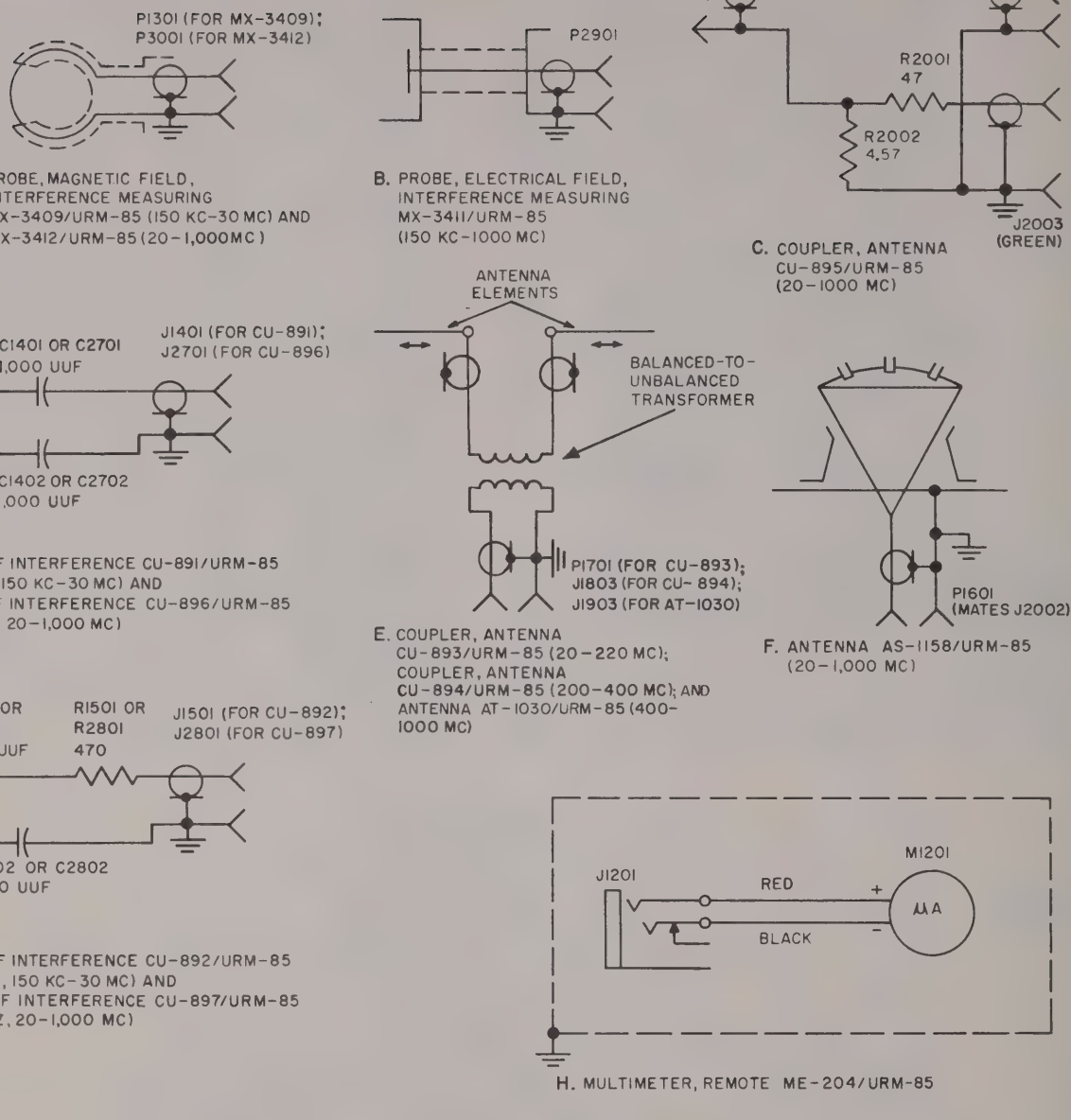

Figure 38. Signal pickup devices, schematic diagrams.

housing which has two spring-loaded binding posts at one end and an N-type connector at the opposite end. The uninsulated ends of two wire leads, which are connected to the audio or powerline at their opposite ends, are inserted into the binding posts. Any dc voltage present on the lines under measurement is blocked by coupling capacitors C1401 and C1402. The rf signal at connector jack J1401 is coupled through the red color-coded coaxial cable of Cable Assembly Set, Electrical MX-3410/URM-85 to the main unit SIGNAL INPUT jack for amplification, detection, and meter presentation.

e. Coupler, Radio Frequency Interference CU-892/URM-85 (G, fig. 38). To conduct rf signals or noise interference signals from approximately 500-ohm impedance two-wire audio-signal or electrical powerlines in the 150-kc to 30-mc frequency range, another capacitive-type pickup device is employed. Similar in construction and function to the CU-891/URM-85 (*d* above), this coupler has one additional circuit component. Resistor R1501, in series with the ungrounded lead from the audio-line or powerline coupling capacitor C1501, serves as an impedance-matching device. Effectively, it converts the approximate 500-ohm input line to a 50-ohm coaxial cable jack J1501 to the 50-ohm impedance so that maximum power transfer from connector jack J1501 to the 50-ohm coaxial cable can be effected. Again, the red color-coded coaxial cable of Cable Assembly Set, Electrical MX-3410/URM-85 conducts the rf signal to the main unit front-panel SIGNAL INPUT jack for amplification, detection, and meter presentation.

60. Minor Components for Use with Tuning Units 2, 3, and 4 (fig. 38)

a. Antenna AS-1158/URM-85. The discone (broadband) antenna (F, fig. 38) is used as a nondirectional, relatively constant impedance antenna over the wide frequency range from 20 to 1,000 mc with tuning units 2, 3, and 4. In operation, it is mounted on the AT-1027/URM-85, which functions as a counterpoise to simulate earth ground. At the curved top surface of the cone, three sockets are provided to accept the specific number of Mast Sections (AB-21/GR) required for resonating with the rf signal under measurement, as illustrated in TM 11-6625-351-12. The rf signal is conducted from the base of the sockets within the antenna housing by a wire post to the modified N-type terminating connector P1601 at the base of the cone-shaped structure. The outside shell of connector P1601 is grounded through the unbalanced injection block (Coupler, Antenna CU-895/URM-85) and the rf cables to the ground potential of the main unit panel.

b. Coupler, Antenna CU-895/URM-85 (C, fig. 38). This coupler, housed in an irregular-shaped metal and plastic container, is provided as a means of coupling the output of Antenna AS-1158/URM-85 (*a* above) to the test set. One connector jack, J2002, located at one end of the coupler, mates the N-type connector plug, P1601, which terminates the base of the broadband antenna. Two connector jacks, J2001 and J2003, are located adjacent to each other at the opposite end of the coupler. These connectors function as follows:

(1) *Rf signal path connector J2001.* The rf signal is coupled from input connector J2002 direct to rf output connector J2001. The red color-coded coaxial cable of Cable Assembly Set, Electrical MX-3410/URM-85 interconnects output jack J2001 to the main unit front-panel SIGNAL INPUT jack. Since the outer shell of the SIGNAL INPUT jack is at chassis ground potential, the outer shell of jack J2001 and the counterpoise are also conducted through to ground potential. The rf signal is conventionally amplified and detected in the test set for presentation on the panel-mounted meter.

(2) *Impulse generator signal path connector J2003.* When the broadband antenna over the frequency range from 20 to 1,000 mc is used,

calibration of the test set is accomplished by injecting a signal from the impulse generator to the attenuator network housed in the coupler. The signal path is from the main unit IMPULSE OUTPUT front-panel jack, through the green color-coded cable of Cable Assembly Set, Electrical MX-3410/URM-85 and connector jack J2003. The calibrating voltage is then applied to a 10-to-1 voltage-divider network, which consists of R2001 shunted by R2002; this results in a 20-db signal loss. The calibrating signal from the impulse generator circuit is injected in series with the incoming rf signal (identical with the method used in loop antenna and the vertical antenna and the vertical antenna, para 59*a* and *b*). Therefore, the calibrating voltage causes a current to flow through the same circuit path as that of the unknown signal. In this manner, a direct comparison of the amplitude of the rf incoming signal, with reference to the impulse generator signal, is obtained without introducing transformation factors.

c. Coupler, Antenna CU-893/URM-85 (E, fig. 38). Coupler Antenna CU-893/URM-85 is used for picking up radiated signals over the frequency range from 20 to 220-mc (corresponding to the range of tuning unit 2). It consists of a phenolic tube which functions as a supporting boom, a block assembly at one end of the boom, and a balanced-to-unbalanced transformer (balun) at the opposite end of the boom, the purpose of the block assembly is to serve as a means of physical attachment and electrical connection for the two arms of a telescopic dipole antenna. The purpose of the balun is to convert the balanced input feeding system, which consists of the two dipole arms, into an unbalanced feed which consists of the single coaxial terminating connector P1701.

(1) *Balanced input system.* Balanced output from the center of the antenna is fed through a pair of coaxial cables, one for each dipole arm, to the balun. The input side of the balun is also balanced, so that both arms of the antenna *see* the same impedance. The length of the coaxial cables is critical for optimum phasing and a low voltage standing wave ratio over the frequency band. Since the phenolic boom is too short for a straight run of coaxial cables over the 20- to 220-mc band, the remaining lengths of the cables are wound on a bakelite form within the balun housing.

(2) *Unbalanced output connector.* Essentially, the actual coupling between the input and output circuits consists of two 1-turn loops of wire coupled together. The rf energy from the balanced coaxial cables is coupled into the N-type output connector, P1701, which mates with the input end of the red color-coded cable of Cable Assembly Set, Electrical MX-3410/URM-85. The far end of this cable applies the rf signal to the main unit SIGNAL INPUT jack for amplification, detection, and meter presentation on the test set.

d. Coupler, Antenna CU-894/URM-85 (E, fig. 38). Coupler, Antenna CU-894/URM-85 is used for picking up radiated signals over the frequency range from 200- to 400-mc (corresponding to the range of tuning unit 3). This coupler functions identically with the CU-893/URM-85 (*c* above). At one end of the boom, its block assembly is physically constructed of plexiglass instead of phenolic material; in addition, the CU-894/URM-85 output connector at the balun end of the boom is designated reference symbol J1803.

e. Antenna AT-1030/URM-85. Antenna AT-1030/URM-85 is used for picking up radiated signals over the frequency range from 400- to 1,000-mc (corresponding to the range of tuning unit 4). Although this antenna is not shown in figure 38, it is identical in circuit analysis with the CU-893/URM-85 (*c* above) and the CU-894/URM-85 (*d* above) except for the addition

of a 90° angle corner reflector. This reflector, illustrated in TM 11-6625-351-12, provides a power gain of approximately 10-db throughout its frequency range. To obtain a proper impedance match to the two 50-ohm coaxial cables that connect the dipoles (at one end of the boom) to the balun (at the opposite end of the boom), an antenna impedance of 100-ohms is required. This impedance is obtained with a dipole-to-reflector corner spacing of 0.4 wavelength. Since the wavelength changes as the test set is tuned to various frequencies in the 400- to 1,000-mc range, the spacing between the dipoles and the corner of the reflector must be adjusted. One side of the megacycle ruler, supplied as a minor component, is calibrated to indicate the proper spacing between the plane of the dipoles and the corner of the reflector; the other side of the ruler is calibrated to indicate the proper length of each dipole arm for the particular frequency under measurement. Each dipole is of telescopic construction and may be extended from its minimum collapsed length of 2-1/4 inches to a maximum length of approximately 6-1/2 inches.

f. Probe, Magnetic, Interference Measuring MX-3412/URM-85 (A, fig. 38). The magnetic field probe is used to localize magnetic field components of rf interference in the 20- to 1,000-mc frequency range. This signal pickup device is identical in function with the MX-3409/URM-85 (para 59c) which is used for the 150-kc to 30-mc frequency range. Because of the higher frequency electromagnetic fields employed, only 1 turn of wire in the loop end of the probe is required. Connector plug P3001 mates the red color-coded coaxial cable of Cable Assembly Set, Electrical MX-3410/URM-85, so that the path of continuity to the main unit SIGNAL INPUT jack is completed.

g. Coupler, Radio Frequency Interference CU-896/URM-85 (D, fig. 38). The CU-896/URM-85 (a capacitive-type pickup device) is used to conduct rf signals or noise interference signals from 50-ohm impedance 2-wire audio-signal or electrical powerlines in the 20- to 1,000-mc frequency range. The CU-896/URM-85 is identical in function with the CU-891/URM-85 (para 59*d*), but differs in the following physical respects:

Item	CU-891/URM-85	CU-896/URM-85
Height of housing	4 inches	3-1/4 inches.
Coupling capacitors	C1401 and C1402.	C2701 and C2702.
Terminating connector for mating red color-coded rf cable.	J1401	J2701
Applicable frequency range	150 kc to 30 mc.	20 to 1,000 mc.

h. Coupler, Radio Frequency Interference CU-897/URM-85 (G, fig. 38). The CV-897/URM-85 (another capacitive type pickup device) is used to conduct rf signals or noise interference from approximate 500-ohm impedance 2-wire audio-signal or electrical powerlines in the 20- to 1,000-mc frequency range. This coupler is identical in function with the CU-892/URM-85 (para 59e), but differs in the following physical respects:

Item	CU-892/URM-85	CU-896/URM-85
Height of housing	4 inches	3-1/4 inches.
Coupling capacitors	C1501 and C1502.	C2801 and C2802.
Impedance-matching resistor	R1501	R2801
Terminating connector for mating red color-coded rf cable.	J1501	J2801
Applicable frequency range	150 kc to 30 mc.	20 to 1,000 mc.

61. Minor Electrical Components for Use with All Tuning Units (fig. 38)

a. Probe, Electrical Field, Interference Measuring MX-3411/URM-85 (B, fig. 38). The electrical field probe is used to localize the electric field component of rf interference over the complete frequency range of the test set from 150-kc to 1,000-mc. This signal pickup device consists of

a phenolic tube, approximately 8 inches long by 7/8 inch diameter, with a N-type connector at one end, and with a rubber funnel to protect the operator from accidental contact with high voltage. The opposite end of the device is the closed phenolic end of the tube, which protects the uninsulated end of a 6-inch length of No. 14AWG bus bar. Since no electrostatic shield is used on the device, the approximate 1/4-inch length of uninsulated bus bar wire functions as a pickup for the electric field component of rf noise signals. The signal is conducted to the test set by connecting the red color-coded cable of Cable Assembly Set, Electrical MX-3410/URM-85 between the probe connector, P2901, and the main unit SIGNAL INPUT jack. The signal is conventionally amplified, detected, and presented on the test set panel-mounted meter for relative indications of electric field strength or leakage of noise signals from various types of electrical machinery and/or electronic equipment.

b. Multimeter, Remote ME-204/URM-85 (H, fig. 38). This meter is used when signal level indications are required at a remote location from the front panel of the main unit. The distance from the front panel is limited to the 30-foot length of Cord Assembly, Electrical CX-4305/U, which interconnects the front panel RECORDER EXT METER jack to the remote meter jack J1201. Inserting one telephone plug PJ-068, which terminates one end of the CX-4305/U, into the main unit RECORDER EXT METER jack removes meter multiplier resistor R725 from the metering signal path in the main unit (fig. 8). Inserting the remaining telephone plug, PJ-068, which terminates the opposite end of the CX-4305/U, creates a new path of continuity for the metering signal. The resistance of meter movement M1201 is substituted for meter multiplier resistor R725, and identical meter pointer deflections are presented simultaneously on both the panel-mounted meter and the remote meter.

c. Cable Assembly Set, Electrical MX-3410/URM-85 (I, fig. 38). This minor component consists of two 30-foot lengths of Cable, Radio Frequency RG-5B/U that are taped together at frequent intervals to prevent shifting in their relative positions. One length of RG-5B/U is terminated in N-type connectors P2201 and P2202. Each connector has a red plastic band identifying it as the proper pair for coupling the rf incoming signal from the signal pickup device in use to the main unit front-panel SIGNAL INPUT jack. The second length of RG-5B/U is also terminated in N-type connectors, but these two plugs are designated P2203 and P2204. Each of these latter connectors has a green plastic band identifying it as the proper pair for coupling the calibrating signal from the main unit IMPULSE OUTPUT jack to the correspondingly color-coded impulse signal connector on the three signal pickup devices that employ the series method of calibrating the test set.

d. Cable Assembly, Power, Electrical CX-6680/U (J, fig. 38). This 6-foot length of three-conductor cable connects the main unit front-panel POWER receptacle to a source of power 110-125 volts, 50-400-cps. One end of the ac power cable is terminated in a three-socket female-type MS3106-14S-1S connector (P2401) and connects to the front-panel POWER receptacle. The other end of this ac power cable is terminated in a two-prong male-type plug, UP-120M (P2402) and connects to either a wall receptacle (from which 110-125-volt, 50-400-cps, 100-volt ampere power is available) or the AC OUTPUT receptacle on Transformer, Power, Isolation and Step-Down TF-248/G. A battery clip, attached to plug UP-120M by an 8-inch length of insulated wire, is provided for connecting the third conductor in the ac power cable to conduit or earth ground.

e. Cable Assembly, Special Purpose, Electrical Branched CX-6681/URM-85 (fig. 39). This cable assembly is used to apply operating voltages and to couple signals to and from the main unit when a tuning unit is being aligned or repaired. The main branch of the cable is 30-inches long and serves the following functions:

(1) *Male connector P901.* Connector

P901 is a two-prong male plug that mates a two-socket female receptacle on the right wall of the main unit tuning unit compartment (fig. 46). Withdrawal of a tuning unit from the tuning unit compartment open-circuits microswitch S711; this action disables operating power from the main unit power transformer T702 (fig. 6). The conductors connected to plug P901 serve as a jumper to restore operating power to the main unit transformer T702. However, the jumper circuit is completed only when microswitches S901 and S902 are depressed to their closed-circuit position, as described in (2) and (3) below.

(2) *Female multipin connector P902.* Connector P902 consists of 18 straight single-conductor sockets and 2 coaxial conductor sockets. When P902 is mated with the receptacle at the rear of the tuning unit under measurement, the 18 single-conductor sockets provide a path of continuity for the ac and dc potentials developed in the main unit for tuning unit operation. Coaxial conductor socket A1 serves as the termination for the shielded wire that provides a dc path for the audio signal developed in the tuning unit to audio detector V701 in the main unit. Coaxial socket A2 provides a path for the rf signal (which enters the test set through the main unit) or for the calibrating signal (developed by impulse generator G701 in the main unit) to the rf tuner section within the tuning unit. In addition to providing dc paths of continuity, connector P902 serves another function. This function is the closing of the contacts of microswitch S901, which is physically located on the housing for connector P902. The plunger of the microswitch extends approximately one-half inch beyond the connector housing. As P902 mates with its receptacle on the rear of the tuning unit, the plunger is depressed and the contacts of S901 are set to their closed-circuit position. To assure that the main unit power supply operates into its normal load, however, the ac input powerline is still incomplete until the action described in (3) below is accomplished.

(3) *Male multipin connector P903.* Connector P903 consists of 18 straight single-conductor pins and 2 coaxial-conductor plugs. When P903 is mated with receptacle J701, mounted on the inside rear wall of the tuning unit compartment, the 18 single-conductor pins provide a path of continuity for the ac and dc potentials developed in the main unit for tuning unit operation. Coaxial conductor pin A1 serves as the termination for the shielded wire that provides a dc path for the audio output signal from the tuning unit to audio amplifier V701 in the main unit. Coaxial conductor pin A2 provides a path for the rf or calibrating signal from the main unit to the rf tuner section of the tuning unit. Connector P903 serves one additional function, similar to that of P902 ((2) above). This function is the closing of the contacts of microswitch S902, which is physically located on the housing for connector P903. As P903 mates with main unit receptacle J701, the protruding plunger of the microswitch is depressed and the contacts of S902 are set to their closed-circuit position. With S901 on connector P902 closed ((2) above), this action completes the jumper circuit across tuning unit compartment microswitch S711 (fig. 6), and the ac input power to the main unit transformer is restored. The power supply works into its rated load, which consists of an operating tuning unit.

62. Transformer, Power, Isolation and Step-Down TF-248/G (fig. 40)

a. *120V Position of S802.* This external

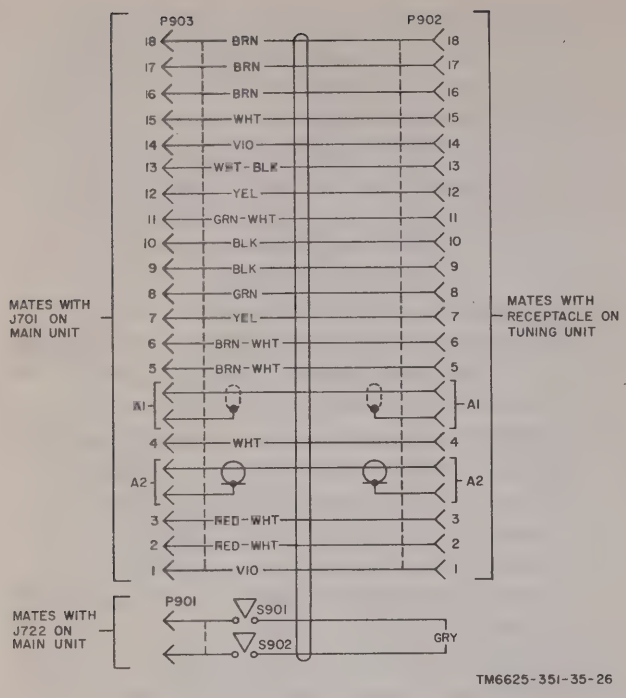

Figure 39. Cable Assembly, Special Purpose, Electrical Branched CX-6681/URM-85, schematic diagram.

transformer is used to supply the test set with an isolated source of power 110-125-volts, 50-400-cps when its front-panel switch S801 is placed at the ON position, S802 is placed at the 120V position, and power cord plug P801 is connected to a nominal 115-volt power source. Under this condition, the two primary windings of the power transformer are connected in parallel, as shown in B, figure 40. Fuse F801 protects the equipment from overload. The secondary output of transformer T801 is filtered by capacitors C801 and C802 (A, fig. 40). The filtered nominal 115-volt output is available at front-panel receptacle J801 for connection through Cable Assembly, Power, Electrical CX-6680/U to the main unit POWER receptacle.

b. 240V Position of S802. When the available power source for the test set is 220-250-volts, 50-400-cps, the external transformer functions as a stepdown transformer. Setting the 120V-240V switch to the 240V position connects the two primary windings of power transformer T801 in series, as shown in C, figure 40. The input voltage is reduced by a two-to-one radio, and a nominal 115-volt output, filtered by capacitors C801 and C802, is available at receptacle J801 for energizing the test set.

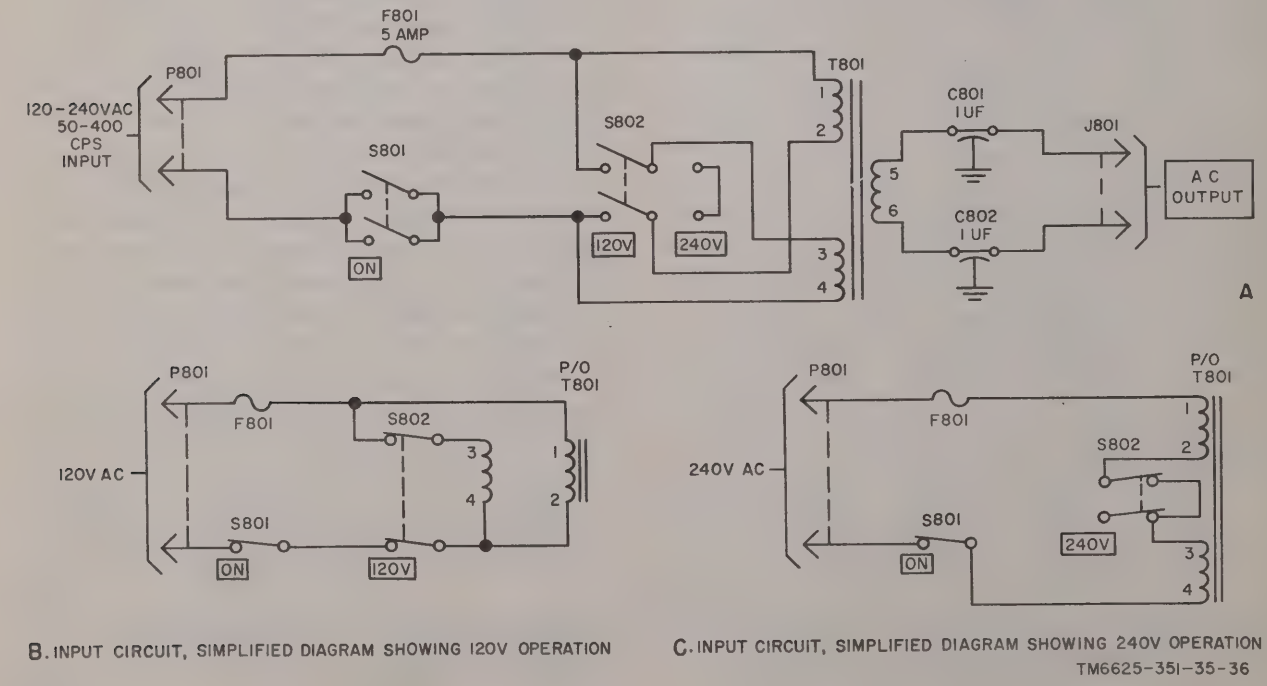

Figure 40. Transformer, Power, Isolation and Step-Down TF-248/G, schematic diagram.

CHAPTER 2

TROUBLESHOOTING

Section I. GENERAL TROUBLESHOOTING TECHNIQUES

Warning: **When servicing the test set, be extremely careful not to contact the B+ voltages (from -150 volts to +300 volts dc, and from -300 volts to +150 volts dc). With ac power removed, high dc potentials may still be retained as charges on capacitors. Before touching the exposed parts, be sure that these potentials are removed by shorting the capacitors to ground. Be especially careful when checking the ac input circuits at fuseholder XF701 at the terminals of powerline filters FL703 through FL706, at terminal boards TB701 through TB706, and at the terminals of POWER ON-OFF switch S710.**

63. General Instructions

Troubleshooting at field and depot maintenance level includes all the techniques outlined for organizational maintenance and any special or additional techniques required to isolate a defective part. The field and depot maintenance procedures are not complete in themselves, but supplement the procedures described in TM 11-6625-351-12. The systematic troubleshooting procedure, which begins with the operational and sectionalization checks that can be performed at an organizational level, must be completed by means of sectionalization, localization, and isolation techniques.

64. Organization of Troubleshooting Procedures

a. General. The first step in servicing a defective test set is to sectionalize the fault. Sectionalization means tracing the fault to a major component or circuit responsible for abnormal operation. The second step is to localize the fault. Localization means tracing the fault to a defective part responsible for the abnormal condition. Some faults, such as burned-out resistors or rectifiers, and arcing or shorted transformers, often can be located by sight, smell, and hearing. The majority of faults, however, must be localized by checking voltages and resistances.

b. Sectionalization. The test set consists of several units: the various antennas and probes, the tuning units, the main unit, and the external transformer (para 62) when its use is required. The first step in tracing trouble is to locate the faulty unit by the following methods:

(1) *Visual inspection.* Visual inspection enables the repairman to locate faults without testing or measuring circuits. This inspection is valuable to avoid additional damage which might occur to components through improper servicing methods, and also to forestall future failures. The visual inspection checks with the power off are given in TM 11-6625-351-12. With the power on, visual inspection often enables the repairman to locate tubes with open filaments, and gassy tubes which give off a bluish-purple glow. All meter readings or other visual signs should be observed and an attempt made to sectionalize the fault to a particular unit.

(2) *Operational tests.* Operational tests frequently indicate the general location of trouble. In many instances, the results of the tests will determine the exact nature of the fault. The operational checklist in TM 11-6625-351-12 is a good operational test.

c. Localization. The tests listed below will help to isolate the trouble. First localize the trouble to a single stage or circuit,

and then isolate the trouble within that circuit by voltage, resistance, and continuity measurements.

(1) *Resistance measurements.* The use of resistance measurements to locate trouble will prevent further damage to the equipment if short circuits are present. To assist in the localization of such faults, troubleshooting data include the normal resistance values as measured at tube sockets and at key terminal points. The normal resistance values at any point in the main unit can be determined by referring to the resistance values shown in figures 41 through 45, or by the resistor and capacitor color codes (fig. 96 and 97). Before making any resistance measurements, turn off the power and remove the main unit dust cover by following the procedure described in paragraph 40*b*, item 12, of TM 11-6625-351-12. A convenient point for making overall resistance measurements of a tuning unit is at the multipin connector located at the rear of the tuning unit chassis. With a tuning unit removed from the main unit and placed on the workbench, this connector permits a checkout of the proper resistance value for the 20 terminals within the connector housing. If trouble is indicated by lack of correspondence between actual measurements taken at the multipin connector and the normal readings listed in paragraph 68, further localization of the trouble must be obtained by measuring resistances at the various tube sockets within the tuning unit. To gain access to the tuning unit tube sockets, remove the tuning unit dust cover as follows:

(a) Remove the four screws that secure the rear of the tuning unit dust cover to the tuning unit frame assembly.

(b) Remove the four screws that secure the tuning unit dust cover to the rear of the tuning unit front panel. One screw each is located at the top, bottom, right, and left sides of the tuning unit dust cover.

(c) Hold the fron panel securely and carefully slide the dust cover off the tuning unit frame assembly.

(2) *Voltage measurements.* Most troubles either result from abnormal voltage or they produce abnormal voltages. Normal voltages at tube sockets and key terminal points in the main unit are shown in figures 41 and 43 through 45. A convenient point for measuring power supply voltages is at the feedthrough terminals which project from the filter box assembly, mounted on the exterior rear of the main unit (fig. 45). Compare the actual readings taken with the normal readings shown. Tube socket voltages checks for the electron tubes housed within each tuning unit can be made only by use of Cable Assembly, Special Purpose, Electrical Branched CX-6681/URM-85 (para 61*e*). In addition, the dust cover of the tuning unit must be removed ((1) above). Figure 46 illustrates a typical tuning unit operating outside of its tuning unit compartment and receiving proper ac and dc potentials from the receptacle mounted on the rear interior wall of the tuning unit compartment. With a malfunctioning tuning unit set up as shown in figure 46, compare the voltage readings taken with the normal readings shown in figures 47 through 50.

(3) *Troubleshooting chart.* The trouble symptoms listed in the chart (para 67) will aid in localizing trouble.

(4) *Intermittent troubles.* In all these tests, the possibility of intermittent troubles should not be overlooked. If present, this type of trouble often can be made to appear by tapping or jarring the equipment. Check the wiring and con-

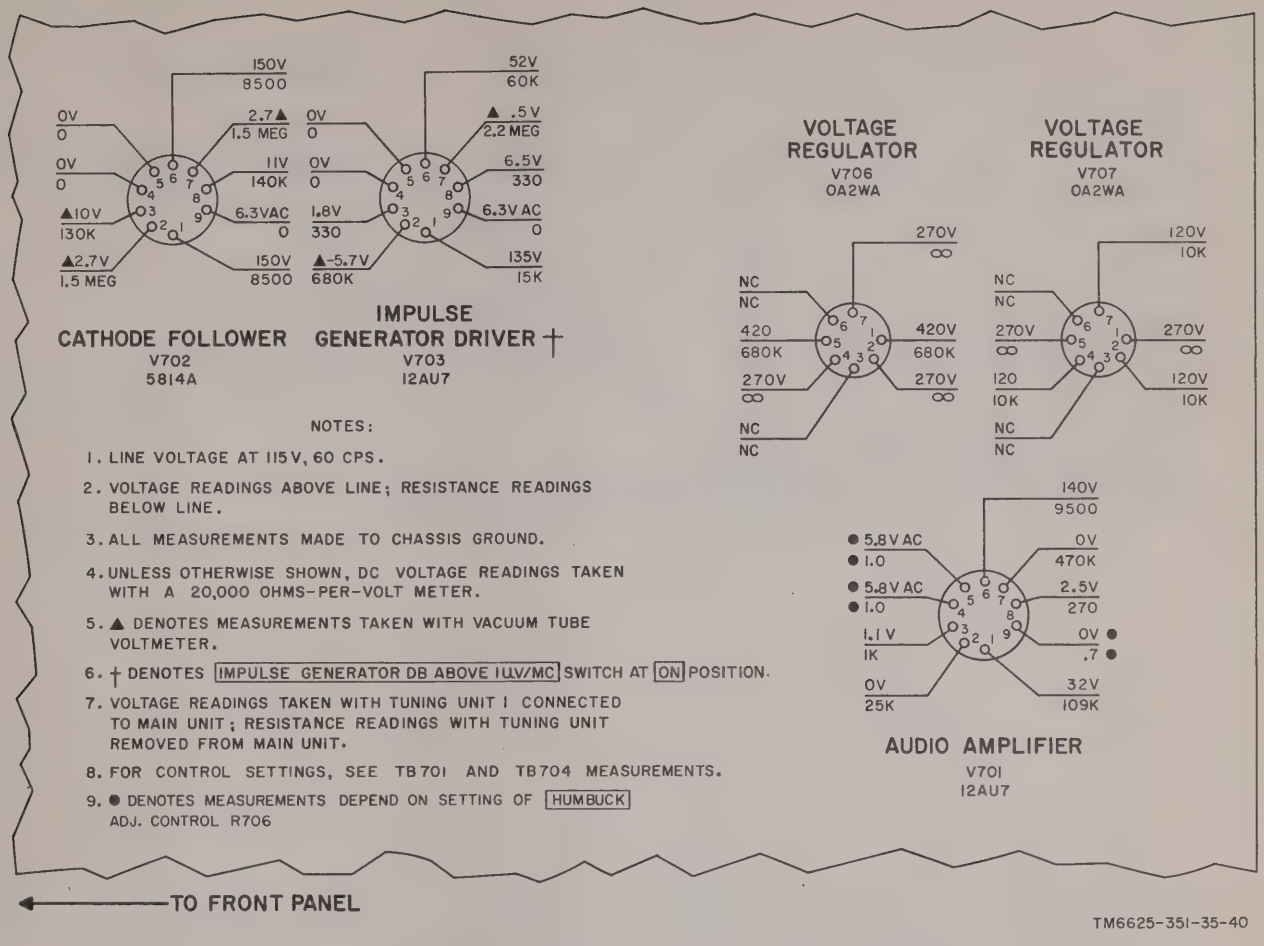

Figure 41. Tube socket voltage and resistance diagram, main unit chassis, bottom view.

nections to the minor components of the test set. Tap the suspected parts gently with an insulated tool such as a fiber rod. It is possible that the trouble is not in the test set itself, but in the installation (mountings, accessories, adjustments, loose or damaged cables or connectors, equipment under test, etc). A detailed equipment performance checklist is given in TM 11-6625-351-12. A careful checkout of the minor components, as directed in the equipment performance checklist, will frequently indicate the cause of equipment malfunction and will, perhaps, eliminate unnecessary and time-consuming troubleshooting within the individual subassemblies of the main unit and the tuning units. *Always* be sure that the installation is satisfactory before troubleshooting the test set.

(5) *Signal substitution.* The principal advantage of the signal substitution method (para 71 through 74) is that it usually enables the repairman to localize the trouble accurately and quickly to a particular stage when the preceding tests ((1) through (4) above) have not been successful.

65. Test Equipment Required

The following chart lists the test equipment required for troubleshooting Radio Interference Measuring Set AN/URM-85, the associated technical manuals, and the assigned common names. Commercial test equipment is listed where Signal Corps test equipment was not used for making measurements.

Test equipment	Technical manual	Common name
R. F. Signal Generator Set AN/URM-25D or Signal Generator, General Radio Co., Type 1001-A Standard.	TM 11-5551D -----	Tuning unit 1 signal generator.
Signal Generator TS-497(*)/URR[a] ----------	TM 11-5030A------	Tuning unit 2 or 3 signal generator.
Signal Generator AN/URM-49A or Signal Generator, Measurements Corp., Model 84 Standard.	TM 11-6625-280-15	Tuning unit 4 signal generator.
Voltmeter, Meter ME-30A(*)/U[b] ----------	TM 11-6625-320-12	Ac vtvm.
Multimeter ME-26B/U or Senior Volt-Ohmyst, RCA Model WV-98A.	TM 11-6625-200-12	Dc vtvm.
Multimeter TS-352(*)/U[c] ----------	TM 11-5527 -------	Multimeter.
Test Set, Electron Tube TV-7(*)/U[d] ----------	TM 11-6625-274-12	Tube tester.
Crystal Rectifier Test Set TS-268(*)/U[e] ---------	TM 11-1242 -------	Crystal diode tester.
Test Set, Electron Tube TV-2/U ----------	TM 11-6625-316-12	

[a] Indicates models TS-497A/URR, TS-497B/URR, and TS-497C/URR.
[b] Indicates models ME-30A/U, ME-30B/U, and ME-30C/U.
[c] Indicates models TS-352/U, TS-352A/U, and TS-352B/U.
[d] Indicates models TV-7/U, TV-7A/U, TV-7B/U, and TV-7D/U.
[e] Indicates models TS-268/U, TS-268A/U, TS-268B/U, TS-268C/U, TS-268D/U, and TS-268E/U.
Note: For additional information on test equipment required, refer to paragraphs 81 and 82.

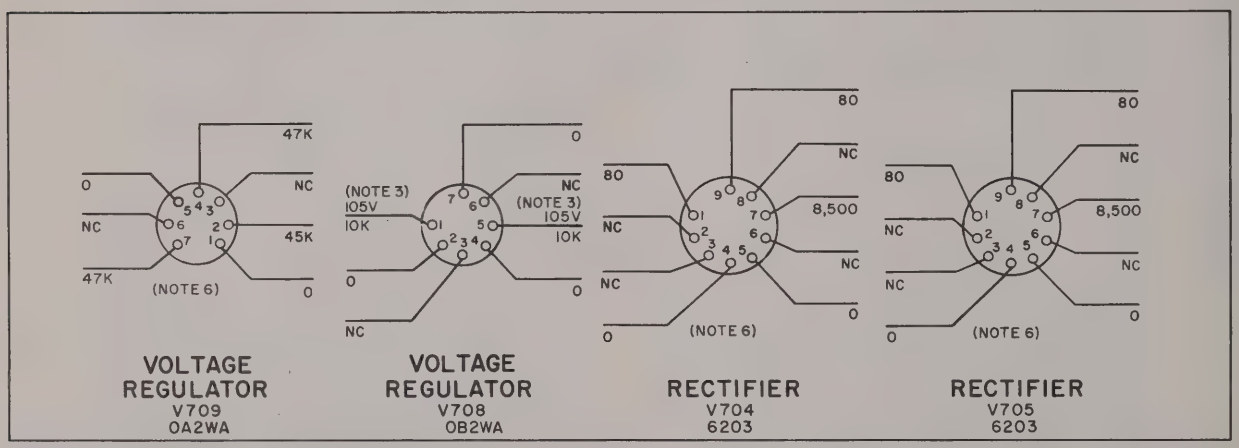

NOTES

1. RESISTANCE READINGS ARE SHOWN BELOW LINE; READINGS TAKEN WITH TUNING UNIT 1 REMOVED AND NOT CONNECTED TO MAIN UNIT.
2. TUBE SOCKETS ARE VIEWED FROM TOP OF CHASSIS.
3. VOLTAGE AND RESISTANCE MEASURED AT TOP OF R785 ON VOLTAGE REGULATOR ASSEMBLY. RESISTANCE VALUE DEPENDS ON SETTING OF B+ADJ CONTROL R789.
4. DO NOT REMOVE ELECTRON TUBES FROM SOCKETS, WITH POWER APPLIED. DOING SO WILL DAMAGE THE EQUIPMENT.
5. NC DENOTES NO CONNECTION.
6. REFER TO TB703 FOR CONTROL SETTINGS AND VOLTAGE MEASUREMENTS (USE RESISTOR TERMINATIONS WHICH CORRESPOND TO TUBE PINS.

TM6625-351-35-41

Figure 42. Tube socket resistance diagram, upper deck of main unit, top view.

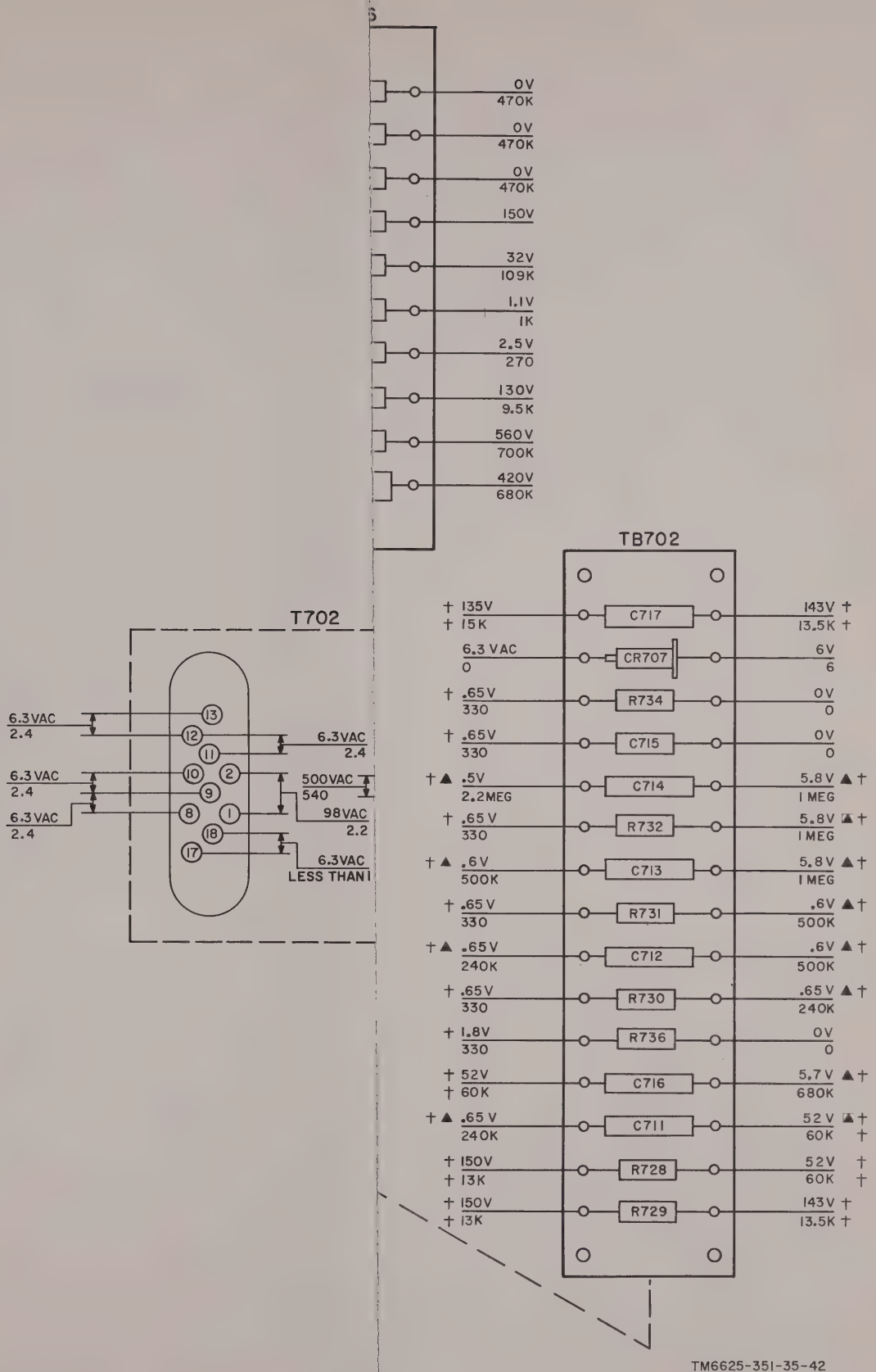

TM6625-351-35-42

Test equipment	Technical manual	Common name
R. F. Signal Generator Set AN/URM-25D or Signal Generator, General Radio Co., Type 1001-A Standard.	TM 11-5551D -----	Tuning unit 1 signal generator.
Signal Generator TS-497(*)/URR[a] ----------	TM 11-5030A------	Tuning unit 2 or 3 signal generator.
Signal Generator AN/URM-49A or Signal Generator, Measurements Corp., Model 84 Standard.	TM 11-6625-280-15	Tuning unit 4 signal generator.
Voltmeter, Meter ME-30A(*)/U[b] ----------	TM 11-6625-320-12	Ac vtvm.
Multimeter ME-26B/U or Senior Volt-Ohmyst, RCA Model WV-98A.	TM 11-6625-200-12	Dc vtvm.
Multimeter TS-352(*)/U[c] ----------	TM 11-5527 -------	Multimeter.
Test Set, Electron Tube TV-7(*)/U[d] ----------	TM 11-6625-274-12	Tube tester.
Crystal Rectifier Test Set TS-268(*)/U[e] ---------	TM 11-1242 -------	Crystal diode tester.
Test Set, Electron Tube TV-2/U ----------	TM 11-6625-316-12	

[a] Indicates models TS-497A/URR, TS-497B/URR, and TS-497C/URR.
[b] Indicates models ME-30A/U, ME-30B/U, and ME-30C/U.
[c] Indicates models TS-352/U, TS-352A/U, and TS-352B/U.
[d] Indicates models TV-7/U, TV-7A/U, TV-7B/U, and TV-7D/U.
[e] Indicates models TS-268/U, TS-268A/U, TS-268B/U, TS-268C/U, TS-268D/U, and TS-268E/U.
Note: For additional information on test equipment required, refer to paragraphs 81 and 82.

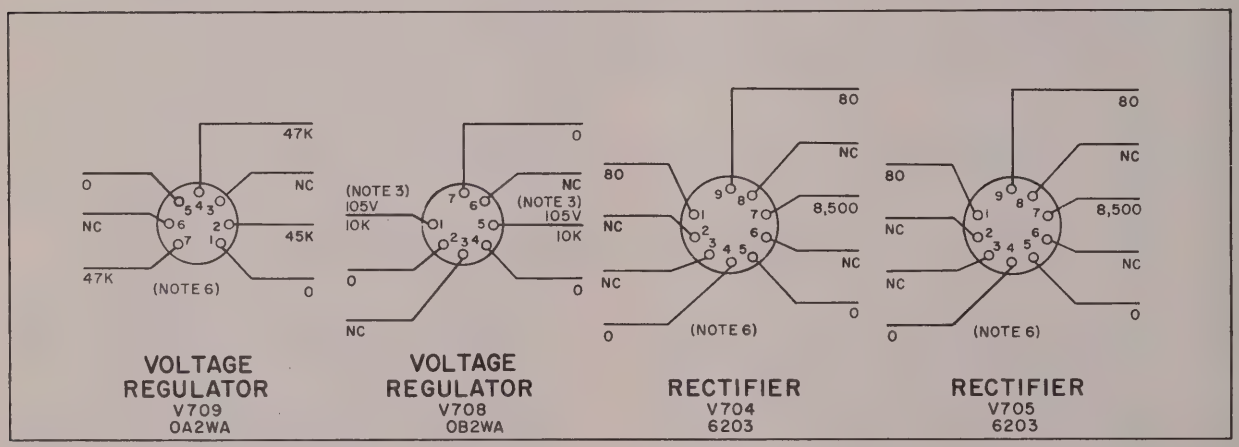

TO FRONT PANEL

NOTES

1. RESISTANCE READINGS ARE SHOWN BELOW LINE; READINGS TAKEN WITH TUNING UNIT 1 REMOVED AND NOT CONNECTED TO MAIN UNIT.
2. TUBE SOCKETS ARE VIEWED FROM TOP OF CHASSIS.
3. VOLTAGE AND RESISTANCE MEASURED AT TOP OF R785 ON VOLTAGE REGULATOR ASSEMBLY. RESISTANCE VALUE DEPENDS ON SETTING OF B+ADJ CONTROL R789.
4. DO NOT REMOVE ELECTRON TUBES FROM SOCKETS, WITH POWER APPLIED. DOING SO WILL DAMAGE THE EQUIPMENT.
5. NC DENOTES NO CONNECTION.
6. REFER TO TB703 FOR CONTROL SETTINGS AND VOLTAGE MEASUREMENTS (USE RESISTOR TERMINATIONS WHICH CORRESPOND TO TUBE PINS.

TM6625-351-35-41

Figure 42. Tube socket resistance diagram, upper deck of main unit, top view.

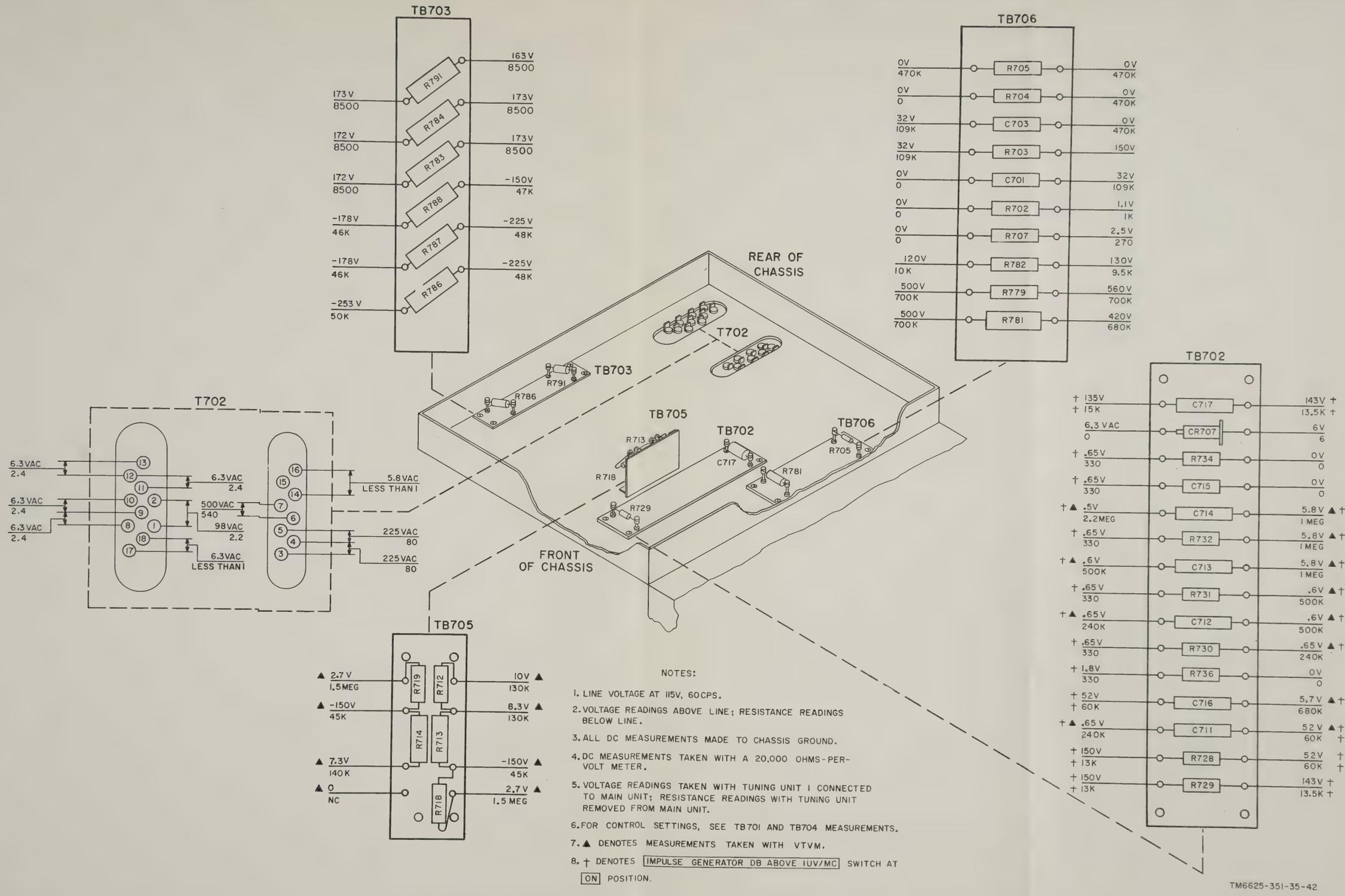

NOTES:

1. LINE VOLTAGE AT 115V, 60CPS.
2. VOLTAGE READINGS ABOVE LINE; RESISTANCE READINGS BELOW LINE.
3. ALL DC MEASUREMENTS MADE TO CHASSIS GROUND.
4. DC MEASUREMENTS TAKEN WITH A 20,000 OHMS-PER-VOLT METER.
5. VOLTAGE READINGS TAKEN WITH TUNING UNIT 1 CONNECTED TO MAIN UNIT; RESISTANCE READINGS WITH TUNING UNIT REMOVED FROM MAIN UNIT.
6. FOR CONTROL SETTINGS, SEE TB701 AND TB704 MEASUREMENTS.
7. ▲ DENOTES MEASUREMENTS TAKEN WITH VTVM.
8. † DENOTES IMPULSE GENERATOR DB ABOVE 1UV/MC SWITCH AT ON POSITION.

TM6625-351-35-42

Figure 43. Voltage and resistance diagram, main unit terminal boards, bottom of chassis.

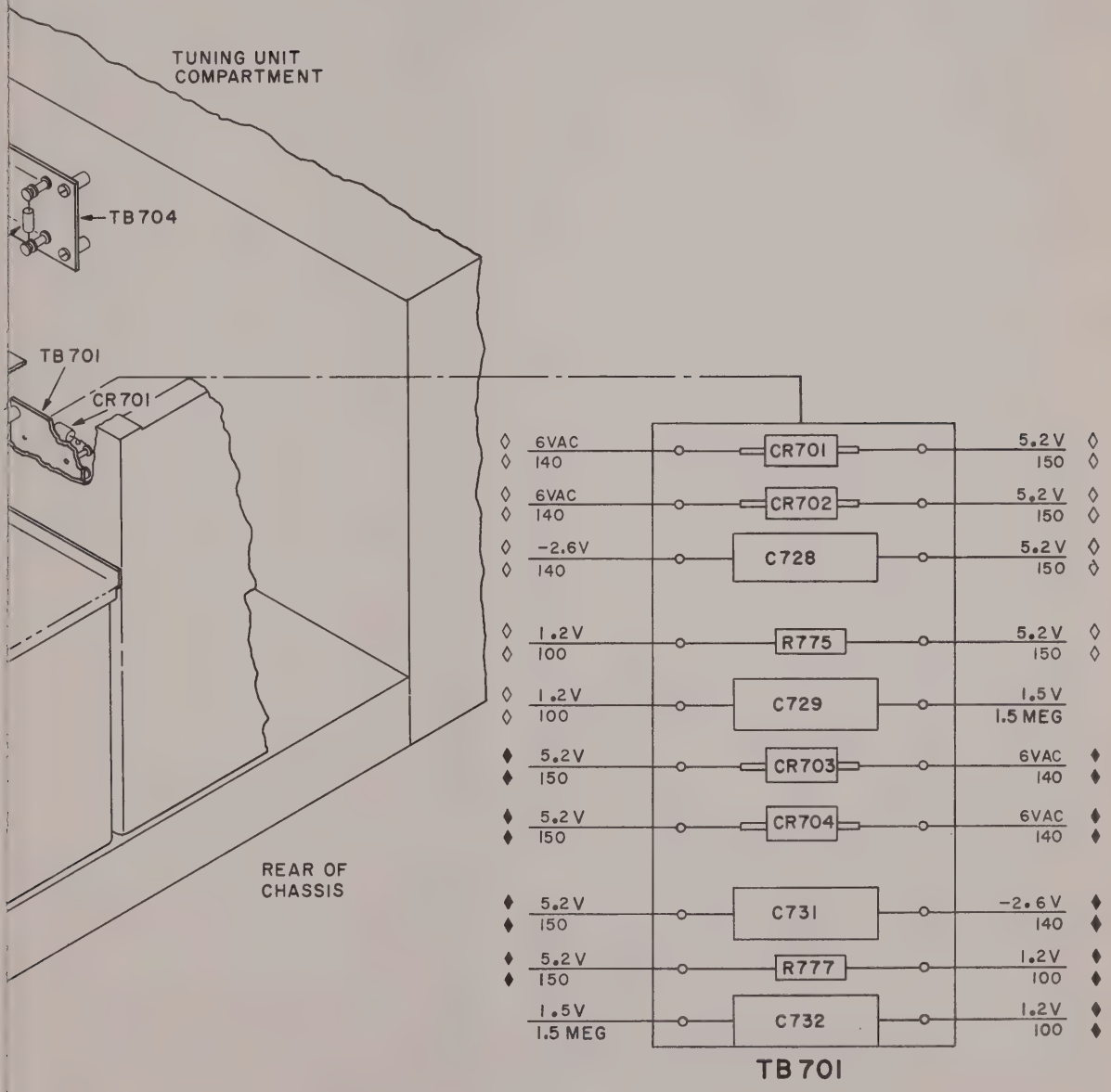

TM6625-351-35-43

ul boards, top of chassis.

NOTES:

1. LINE VOLTAGE AT 115V, 60 CPS.
2. VOLTAGE READINGS ABOVE LINE: RESISTANCE READINGS BELOW LINE.
3. UNLESS OTHERWISE SHOWN, VOLTAGES AND RESISTANCES ARE MEASURED TO GROUND.
4. DC VOLTAGE READINGS TAKEN WITH A 20,000 OHMS-PER-VOLT METER.
5. ALL VOLTAGE READINGS TAKEN WITH TUNING UNIT I INSERTED IN AND CONNECTED TO THE MAIN UNIT. [POWER] SWITCH AT [ON].
6. ALL RESISTANCE READINGS TAKEN WITH TUNING UNIT REMOVED FROM MAIN UNIT, AND OPERATING POWER DISCONNECTED. [POWER] SWITCH AT [OFF].
7. CONDITIONS OF MEASUREMENT:

COMPONENT		CONTROL	SETTING
TUNING UNIT I	STEP	1. [MEGACYCLES] SWITCH	[.15 - .36]
	STEP	2. [GAIN]	FULL COUNTER-CLOCKWISE
	STEP	3. [SLIDEBACK]	FULL COUNTER-CLOCKWISE
MAIN UNIT	STEP	1. FUNCTION SWITCH	[ZERO ADJ]
	STEP	2. [ZERO ADJ]	SET TO OBTAIN [0 DECIBELS] INDICATION ON METER
	STEP	3. FUNCTION SWITCH	[CW AVERAGE]
	STEP	4. CALIBRATION SWITCH	[SERIES CAL & OPERATE]
	STEP	5. [SIGNAL ATTENUATOR DB]	[20]
	STEP	6. [IMPULSE GENERATOR DB ABOVE 1UV/MC] SWITCH	[OFF]
	STEP	7. [VOLUME]	FULL CLOCKWISE
	STEP	8. [METER DAMP.]	OFF

8. VOLTAGE REGULATOR ASSEMBLY REMOVED FOR CLARITY.
9. IMPULSE GENERATOR [POLARITY] SWITCH S709 IN POSITIVE POSITION.
10. [IMPULSE GENERATOR DB ABOVE 1UV/MC] SWITCHES S707, S708, ROTATED FULLY CLOCKWISE.
11. ◊ INDICATES VOLTAGES AND RESISTANCES ARE MEASURED TO C746.
12. ♦ INDICATES VOLTAGES AND RESISTANCES ARE MEASURED TO C748.

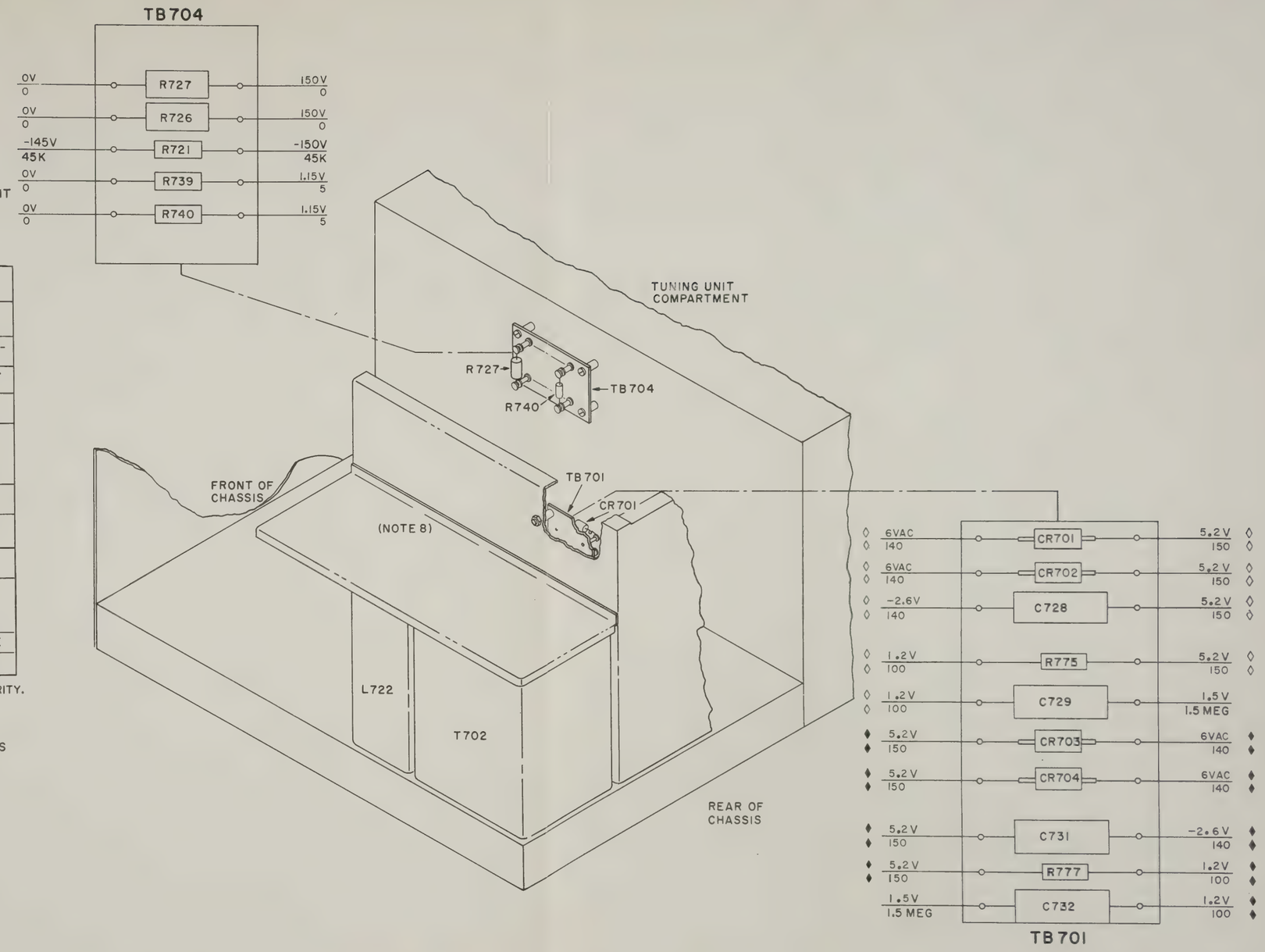

TM6625-351-35-43

Figure 44. Voltage and resistance diagram, main unit terminal boards, top of chassis.

NOTES

1. LINE VOLTAGE AT 115V, 60 CPS.
2. VOLTAGE READINGS ABOVE LINE; RESISTANCE READINGS BELOW LINE.
3. UNLESS OTHERWISE SHOWN: VOLTAGES AND RESISTANCES ARE MEASURED TO GROUND; DC VOLTAGE READINGS TAKEN WITH A 20,000 OHMS-PER-VOLT METER.
4. † INDICATES MEASUREMENTS TAKEN ACROSS TERMINALS 8 AND 10.
5. ▲ INDICATES MEASUREMENTS TAKEN WITH VTVM.
6. ■ INDICATES MEASUREMENT DEPENDS ON SETTING OF R706, IN V701 HEATER CIRCUIT.
7. †† INDICATES MEASUREMENTS TAKEN ACROSS TERMINALS 9 AND 11.
8. □ INDICATES MEASUREMENTS TAKEN ACROSS TERMINALS 7 AND 12
9. ALL READINGS TAKEN WITH TUNING UNIT 1 INSERTED IN AND CONNECTED TO THE MAIN UNIT.
10. CONDITIONS OF MEASUREMENT:

COMPONENT		CONTROL	SETTING
TUNING UNIT 1	STEP L	1. MEGACYCLES SWITCH	.15 - .36
		2. GAIN	FULL COUNTER CLOCKWISE
		3. SLIDEBACK	FULL COUNTER CLOCKWISE
MAIN UNIT	STEP	1. FUNCTION SWITCH	ZERO ADJ
		2. ZERO ADJ	SET TO OBTAIN 0 DECIBELS INDICATION METER
		3. FUNCTION SWITCH	CW AVERAGE
		4. CALIBRATION SWITCH	SERIES CAL & OPERATE
		5. SIGNAL ATTENATOR DB	20
		6. IMPULSE GENERATOR DB ABOVE 1UV/MC SWITCH	OFF
		7. VOLUME	FULL CLOCKWISE
		8. METER DAMP.	OFF

11. Δ INDICATES MEASUREMENT DEPENDS ON SETTING OF R778 OR R776 RESPECTIVELY.

TM6625-351-35-45

sembly.

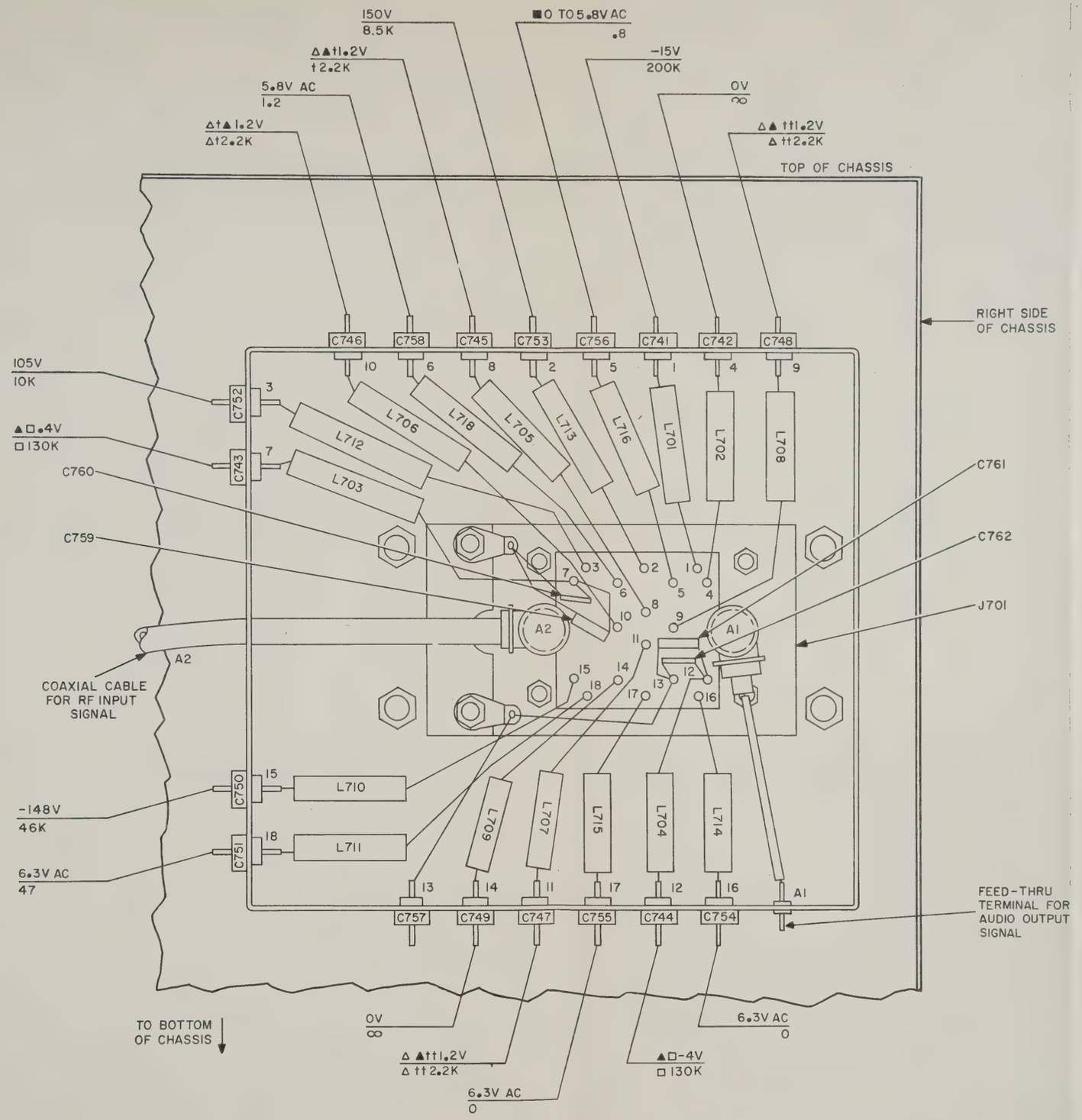

NOTES

1. LINE VOLTAGE AT 115V, 60 CPS.
2. VOLTAGE READINGS ABOVE LINE; RESISTANCE READINGS BELOW LINE.
3. UNLESS OTHERWISE SHOWN: VOLTAGES AND RESISTANCES ARE MEASURED TO GROUND; DC VOLTAGE READINGS TAKEN WITH A 20,000 OHMS-PER-VOLT METER.
4. † INDICATES MEASUREMENTS TAKEN ACROSS TERMINALS 8 AND 10.
5. ▲ INDICATES MEASUREMENTS TAKEN WITH VTVM.
6. ■ INDICATES MEASUREMENT DEPENDS ON SETTING OF R706, IN V701 HEATER CIRCUIT.
7. †† INDICATES MEASUREMENTS TAKEN ACROSS TERMINALS 9 AND 11.
8. □ INDICATES MEASUREMENTS TAKEN ACROSS TERMINALS 7 AND 12
9. ALL READINGS TAKEN WITH TUNING UNIT 1 INSERTED IN AND CONNECTED TO THE MAIN UNIT.
10. CONDITIONS OF MEASUREMENT:

COMPONENT		CONTROL	SETTING
TUNING UNIT 1	STEP	1. MEGACYCLES SWITCH	.15 - .36
		2. GAIN	FULL COUNTER CLOCKWISE
		3. SLIDEBACK	FULL COUNTER CLOCKWISE
MAIN UNIT	STEP	1. FUNCTION SWITCH	ZERO ADJ
		2. ZERO ADJ	SET TO OBTAIN 0 DECIBELS INDICATION METER
		3. FUNCTION SWITCH	CW AVERAGE
		4. CALIBRATION SWITCH	SERIES CAL & OPERATE
		5. SIGNAL ATTENATOR DB	20
		6. IMPULSE GENERATOR DB ABOVE 1UV/MC SWITCH	OFF
		7. VOLUME	FULL CLOCKWISE
		8. METER DAMP.	OFF

11. Δ INDICATES MEASUREMENT DEPENDS ON SETTING OF R778 OR R776 RESPECTIVELY.

TM6625-351-35-45

Figure 45. Voltage and resistance diagram, main unit filter box assembly.

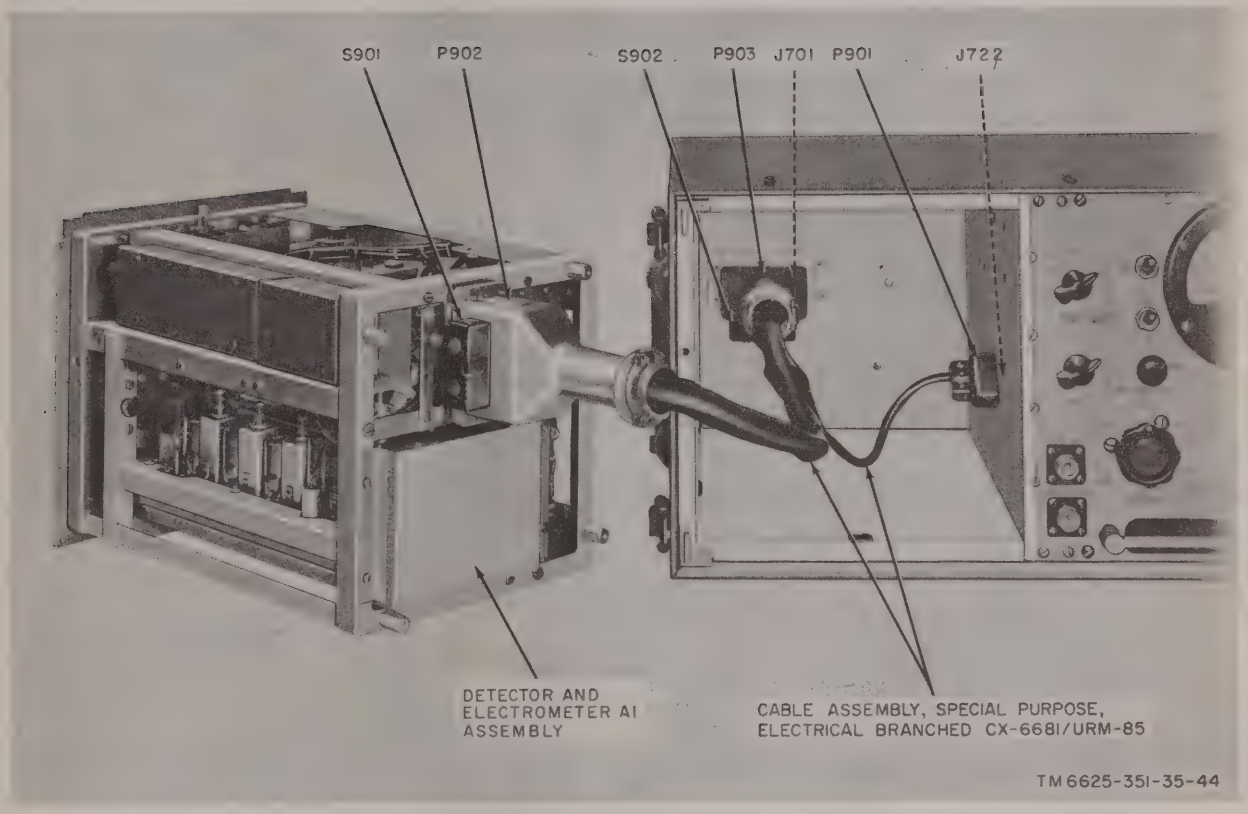

Figure 46. Use of the test harness.

NOTES:

1. VOLTAGE READINGS ABOVE LINE; RESISTANCE READINGS BELOW LINE.
2. ALL MEASUREMENTS MADE TO CHASSIS GROUND.
3. UNLESS OTHERWISE SHOWN, DC VOLTAGE READINGS TAKEN WITH A 20,000 OHMS-PER-VOLT METER.
4. ▲ DENOTES MEASUREMENTS TAKEN WITH VACUUM TUBE VOLTMETER.
5. † DENOTES MEGACYCLES SWITCH AT .36-.87 POSITION.
6. VOLTAGE READINGS TAKEN WITH TUNING UNIT 1 CONNECTED TO MAIN UNIT; RESISTANCE READINGS WITH TUNING UNIT DISCONNECTED FROM MAIN UNIT.
7. FOR CONTROL SETTINGS, SEE TB 701 AND TB 704 MEASUREMENTS.

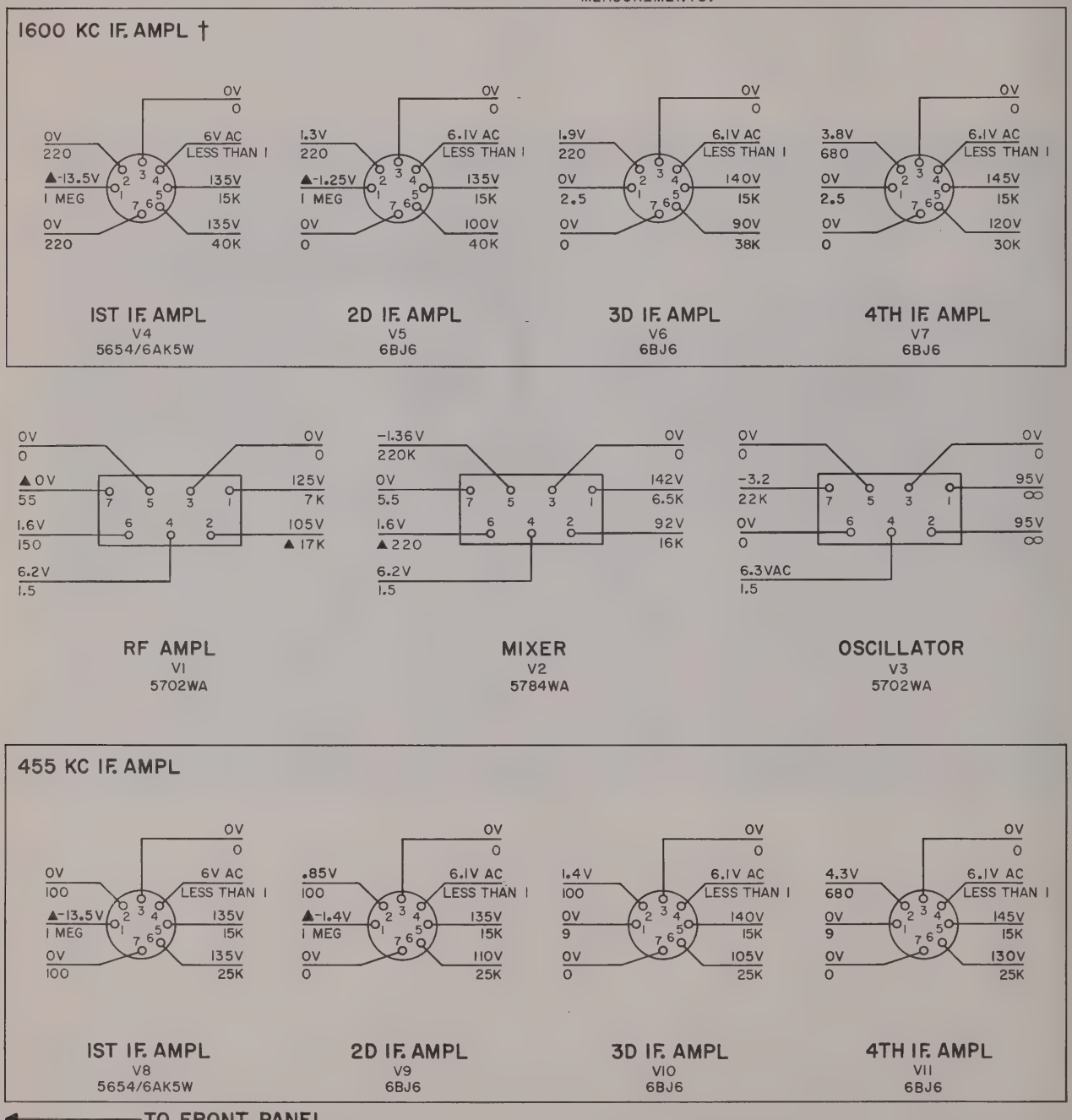

TM6625-351-35-46

Figure 47. Voltage and resistance diagram, tuning unit 1.

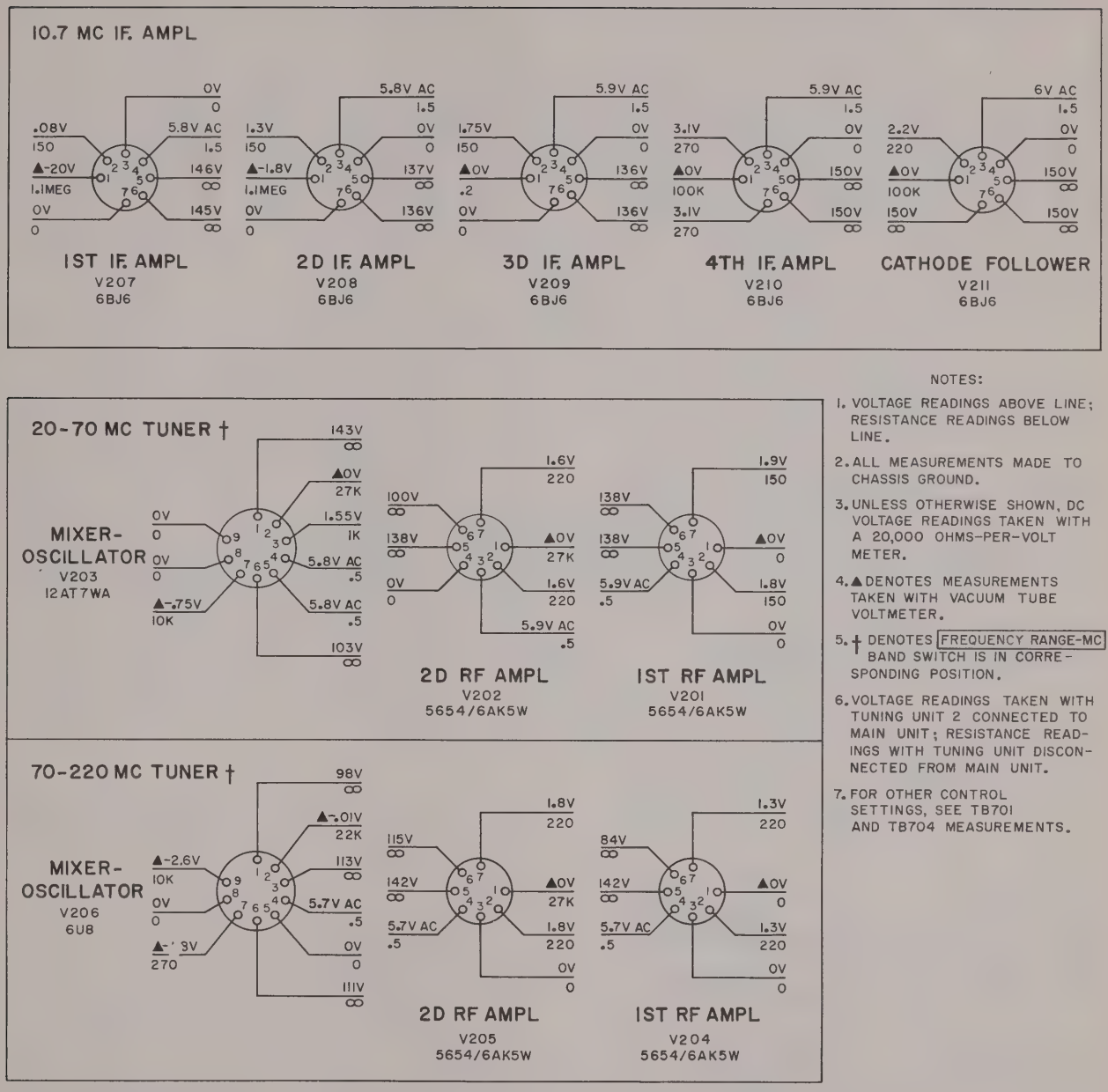

NOTES:

1. VOLTAGE READINGS ABOVE LINE; RESISTANCE READINGS BELOW LINE.
2. ALL MEASUREMENTS MADE TO CHASSIS GROUND.
3. UNLESS OTHERWISE SHOWN, DC VOLTAGE READINGS TAKEN WITH A 20,000 OHMS-PER-VOLT METER.
4. ▲ DENOTES MEASUREMENTS TAKEN WITH VACUUM TUBE VOLTMETER.
5. † DENOTES FREQUENCY RANGE-MC BAND SWITCH IS IN CORRESPONDING POSITION.
6. VOLTAGE READINGS TAKEN WITH TUNING UNIT 2 CONNECTED TO MAIN UNIT; RESISTANCE READINGS WITH TUNING UNIT DISCONNECTED FROM MAIN UNIT.
7. FOR OTHER CONTROL SETTINGS, SEE TB701 AND TB704 MEASUREMENTS.

TM6625-351-35-47

Figure 48. Voltage and resistance diagram, tuning unit 2.

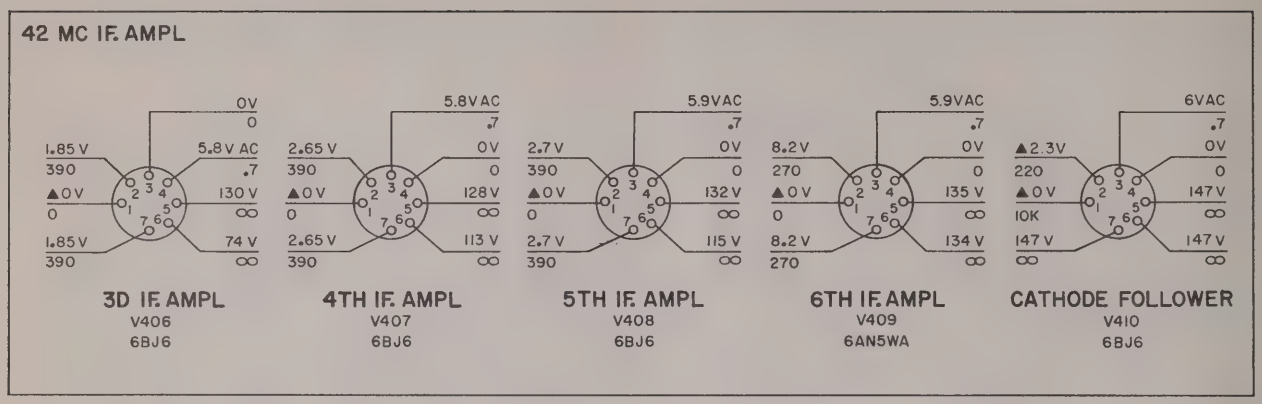

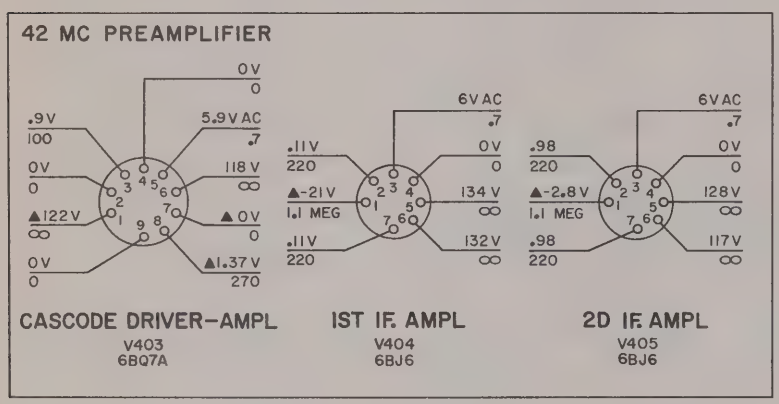

NOTES:

1. VOLTAGE READINGS ABOVE LINE; RESISTANCE READINGS BELOW LINE.
2. ALL MEASUREMENTS MADE TO CHASSIS GROUND.
3. UNLESS OTHERWISE SHOWN, DC VOLTAGE READINGS TAKEN WITH A 20,000 OHMS-PER-VOLT METER.
4. ▲ DENOTES MEASUREMENTS TAKEN WITH VACUUM TUBE VOLTMETER.
5. VOLTAGE READINGS TAKEN WITH TUNING UNIT 3 CONNECTED TO MAIN UNIT; RESISTANCE READINGS WITH TUNING UNIT DISCONNECTED FROM MAIN UNIT.
6. FOR OTHER CONTROL SETTINGS, SEE TB701 AND TB704 MEASUREMENTS.
7. VOLTAGE AND RESISTANCE READINGS MADE FROM SIDE OF 200-400MC RF TUNER.

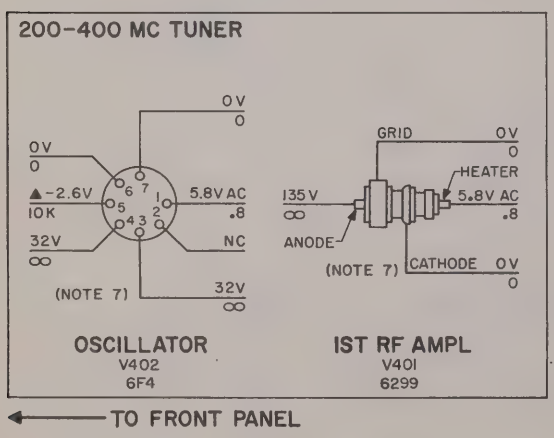

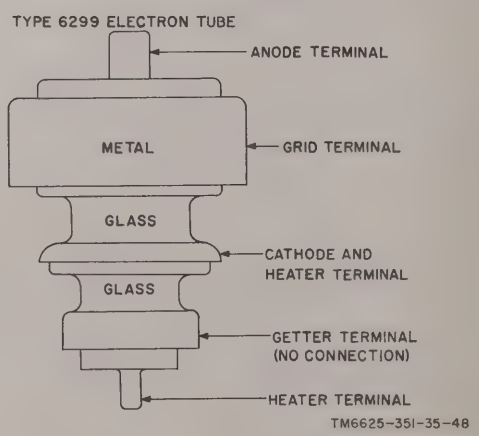

Figure 49. Voltage and resistance diagram, tuning unit 3, showing outline of type 6299 coplanar electron tube.

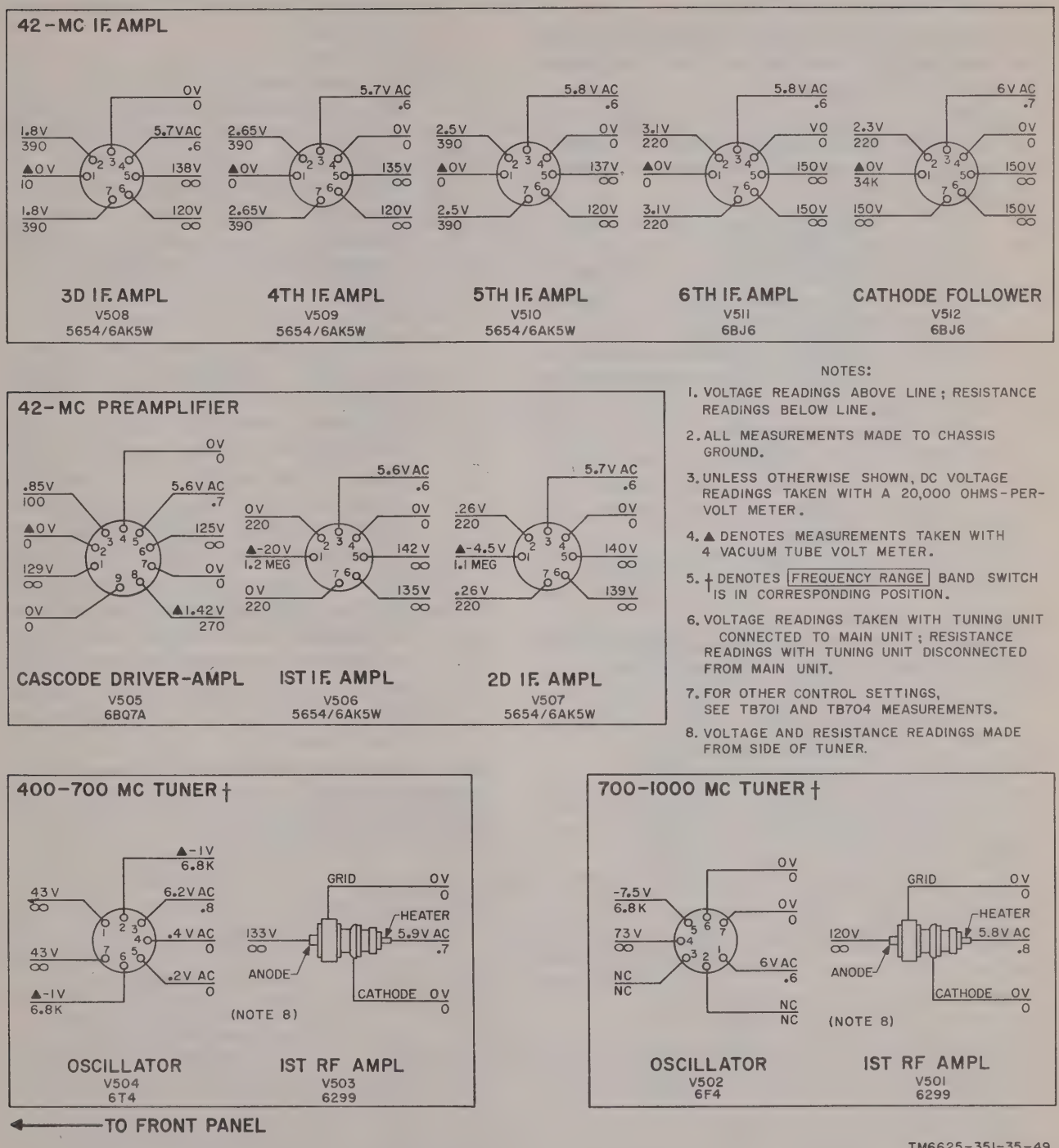

Figure 50. Voltage and resistance diagram, tuning unit 4.

66. Checking B+ and Filament Circuits for Shorts

Caution: **Do not attempt removal of parts before reading the instructions in paragraphs 76 through 80.**

a. When to Check. When any of the following conditions exist, check for short circuits and clear the troubles before applying power:

(1) The nature of the abnormal symtom is not known.

(2) The abnormal symptoms reported from operational tests indicate possible power supply troubles.

(3) The insulation of filament wiring on the underside of the main unit or tuning units shows evidence of melting or charring. This condition usually indicates a short circuit in filament wiring or an internal short in the heaters of electron tubes.

b. Conditions for Tests. To prepare for the short circuit tests, proceed as instructed below.

Warning: **Do not plug in the power cord while taking short circuit measurements.**

(1) Remove the main unit from its instrument case (para 40*b*, item 12, TM 11-6625-351-12).

(2) Unless otherwise indicated, remove tuning unit 1 from the main unit compartment, since the resistance readings shown in figures 41 through 45 were taken under this condition.

c. Measurements.

(1) To take resistance readings from the terminals of electron tube sockets (XV704, XV705, XV708, and XV709) mounted on the upper deck of the main unit, remove the tube from its socket and insert the multimeter test prods into the designated terminals (fig. 42).

(2) Make the resistance measurements indicated in the chart below. A difference of more than 20 percent from readings in the chart should be considered abnormal. If abnormal readings are obtained, perform the isolating procedures listed in the chart. When the faulty part is found, repair the trouble before applying power to the unit. When replacing faulty rectifiers or tubes in the power supply, always check for shorted filter capacitors. Frequently a faulty filter capacitor will cause the rectifier to go bad. In such cases, replace the faulty capacitor before installing the new rectifier.

Note: Be sure to connect the negative test prod of the multimeter to chassis ground for checking the positive power supplies. Reverse the test prods for checking the negative power supplies.

Voltage supply	Point of measurement to ground (unless otherwise designated)	Normal indication (ohms)	Isolating procedure
+150 vdc	Junction of resistors R783 and R784 on terminal board TB703 (fig. 43).	8,500	If resistance is low, check C734, V704, and/or V705 for short circuit. If resistance is high, check R789, filter FL706, and/or coil of vibrating-type regulator K703 for open circuit.
+105 vdc	Terminal 1 of V708 (fig. 42 and 51).	10,000	If resistance is low, check C734 and R785 for short circuit. If resistance is high, check R785 for defect, assuming that +150 vdc supply has checked out satisfactorily.
-150 vdc	High potential side of R786 on terminal board TB703 (fig. 43).	50,000	If resistance is low, check C735 and C736 or rectifiers CR706 and tube V709. If resistance is high, check R786, R787, R788, and/or section A of IMPULSE GEN LEVEL SET control R762.

Voltage supply	Point of measurement to ground (unless otherwise designated)	Normal indication (ohms)	Isolating procedure
±300 vdc	Between terminals 6 and 7 of transformer T702 (fig. 43).	540	If resistance is low, check diode CR705 with crystal diode tester; also check for shorted C733. If resistance is high, check diode CR705 for open circuit; also check R782 for defect.
Electrometer V3 power source (1.2 vdc output).	Between terminals 8 and 10 on filter box assembly (rear exterior of main unit, fig. 45). *Note:* Tuning is connected to main unit through test harness.	2,200	If resistance is low, check C728 and C729, and diode CR701 or CR702 for shorts. If resistance is high, check R775 and R776, or diode CR701 or CR702 for open circuit.
Electrometer V4 power source (1.2 vdc output).	Between terminals 9 and 11 on filter box assembly (rear exterior of main unit, fig. 45). *Note:* Same as above.	2,200	If resistance is low, check C731 and C732, and diode CR703 or CR704 for shorts. If resistance is high, check R799 and R778, or diode CR703 or CR704 for open circuit.
6.3 vac	Terminals 17 and 18 of transformer T702 (fig. 43).	Less than 1	If resistance is exceptionally high, suspect open circuit in filament winding (terminals 17 and 18) of power transformer T702.

67. Troubleshooting

a. Introduction. The troubleshooting chart (*c* below) is designed to supplement the equipment performance checklist in TM 11-6625-351-12. Proceed with the steps of the following checklist until a symptom of trouble appears. Take corrective action to remedy the trouble before proceeding with the next step.

Caution: **If operational symptoms are not known or if they indicate the possibility of short circuits within the equipment, make the short circuit checks described in paragraph 66 before applying power.**

b. Conditions of Troubleshooting. Set up the equipment for the troubleshooting procedure below as follows:

(1) Remove the main unit from its instrument case (para 40*b*, item 12, TM 11-6625-351-12).

(2) Remove the tuning unit under test from the tuning unit compartment of the main unit.

(3) Remove the dust cover from the tuning unit under test (para 64*c*).

(4) Use the test harness to interconnect the tuning unit and the main unit (fig. 46).

(5) Use Cable Assembly, Power, Electrical CX-6680/U to interconnect the POWER receptacle on the main unit front panel to the AC OUTPUT receptacle on the front panel of the TF-248/G.

(6) Interconnect the integral power cable assembly on the TF-248/G to a source of either 110-125 volts or 220-250 volts, 50-400 cps. If the power source is 110-125 volts ac, place the 120V-240V switch on the external transformer front panel to the 120V position. This action will deliver nominal 117 volts ac power, free of powerline disturbances, to the test set. However, if the available power source is 220-250 volts ac, place the 120-240-volt switch on the external transformer to the 240V position. This action causes the TF-248/G to function as a 2 to 1 stepdown ratio transformer.

(7) Set the front-panel controls as directed in the starting and calibrating procedures, TM 11-6625-351-12.

c. Troubleshooting Charts.

Note: Perform the operations in the equipment performance checklist (TM 11-6625-351-12) before using this chart, unless trouble has already been localized.

(1) *TF-248/G.*

Step	Symptom	Probable trouble	Correction
1	Power cord plugged into 110-125-volt ac power source; power switch S801 (B, fig. 40) at ON. 120-240-volt switch S802 at 120V; no output.	Open primary or secondary in transformer T801 (A, fig. 40).	Check continuity between terminals 1-2, 3-4, and 5-6 of T801. If open is indicated, replace transformer T801.
		Open feedthru capacitor C801 or C802 (A, fig. 40).	Check for 120 volts ac at terminals 5 and 6 of T801. If incorrect voltage (±20% of nominal value) is present, check capacitors for continuity and replace if necessary.
		Open power switch S801 or open 120V-240V switch S802 (A or B, fig. 40).	Check switches and replace if necessary.
2	Output available when 120V-240V switch is at 120V (B, fig. 40) but not when switch is at 240V (C, fig. 40).	One primary of T801 open (A, fig. 40).	Check for continuity between terminals 1 and 2 and between terminals 3 and 4 of T801. If open is indicated, replace transformer.
		Defective 120V-240V switch (B or C, fig. 40).	Check switch for proper continuity and replace if necessary.

(2) *Main unit, with tuning unit 1 interconnected by test harness* (fig. 46).

Step	Symptom	Probable trouble	Correction
1	Power switch at ON; main unit pilot lamp and MEGACYCLES dial illumination lamps on tuning unit do not light.	Defective power switch S710 (fig. 51).	Check switch for continuity; replace if necessary.
		Dirty or defective interlock microswitch S711 at top of main unit (fig. 51).	Check interlock switch; clean or replace if necessary.
		Dirty or defective interlock switches S901 and S902 on test harness (fig. 39 and 46).	Check plungers of interlock switches (fig. 39) which are mounted on top of housing for P902 and P903. Check to see that P902 is inserted as far as possible into mating connector on tuning unit; similarly, see that P903 is inserted as far as possible into connector J701 in main unit. Clean or replace switches if necessary.
		Open 6.3 v ac secondary (terminals 17 and 18) or open primary (terminals 1 and 2) of power transformer T702 (fig. 51).	Check continuity of primary (terminals 1 and 2) and between terminals 17 and 18 of transformer. If open is indicated, replace transformer.
2	Pilot and MEGACYCLES dial illumination lamps light; equipment does not operate.	Open secondary on power transformer T702 (fig. 43).	Check continuity between secondary terminals. If secondary is open, replace transformer.
		Defective rectifiers CR701 through CR707 (fig. 43, 52 and 55).	Check rectifiers and replace any found defective.
		Defective rectifiers V704 and V705 (fig. 43, 51, 52, and 54). Defective regulator V708.	Measure voltage at terminal 2 of P701. If less than 150 volts is present, check R783, R784, L722, C734A, and C734B; check vibrating regulator K703. Check V704, V705, and V708.
3	INPULSE GENERATOR DB ABOVE 1μV/MC switch at ON; no audio heard in headset, even with front panel GAIN and VOLUME controls rotated completely clockwise.	Defective resistor or capacitor in repetition rate generator stage V703A or in impulse generator drive stage V703B. Defective V703.	Make voltage and resistance checks (fig. 41); replace any defective parts. Check V703 (fig. 52).

Step	Symptom	Probable trouble	Correction
		Open coil or dirty contacts of relays K701 and K702 (fig. 52).	Check coils with ohmmeter; replace if open or short circuited.
		Defective attenuators AT701 or AT702 (fig. 52).	Check with ohmmeter for continuity; replace if open circuit is indicated.
		Open resistor in impulse generator output control networks S707 and S708 (fig. 53).	Check resistors with ohmmeter; replace if necessary.
		Impulse generator G701 inoperative (fig. 51).	Replace impulse generator.
		Defective test harness (fig. 39). (Disconnect test harness for this test.)	Check continuity of all conductors in test harness, with ohmmeter; repair or replace, if necessary.
		Defective VOLUME control R701	Check potentiometer R701 and replace if defective.
		Defective resistor or capacitor in first audio amplifier stage V701A. Defective V701.	Use voltohmmeter to make voltage and resistance measurements to locate defective part (fig. 41). Check V701 (fig. 52).
		Defective coupling capacitor C703 (fig. 43).	Check capacitor for short or open and replace if defective.
		Defective voltage regulators V706, V707, and V709 (fig. 51 and 52).	Check regulators V706, V707, and V709.
		Defective resistor R707 or capacitor C704 in second audio amplifier stage V701B (fig. 41).	Use voltohmmeter to make voltage and resistance measurements to locate defective part, and replace.
		Open primary or secondary of audio output transformer T701 (fig. 52).	Use ohmmeter to check windings, and replace if defective.
		Defective component in filter FL701.	Check components in filter FL701 (fig. 55).
4	Audio heard in headset, but no indication on meter with function switch at any position.	Defective meter cathode follower resistors R712 through R719, or meter multiplier resistors R723 and R724 (fig. 53), and R725 (fig. 10). Defective V702.	Use ohmmeter to check resistors, and replace defective resistor. Check V702 (fig. 52).
		Defective switch S702 (fig. 53) --	Clean and repair or replace switch.
		Defective component in filter FL702.	Check components in filter FL702 (fig. 55).
		Defective jack J704 ----------	Use ohmmeter to check continuity. If defective, replace filter FL702 (fig. 55).
		Defective meter M701 (fig. 53) --	Check by plugging in remote meter to RECORDER EXT METER jack J704. If remote meter operates, replace main unit meter M701.
5	Meter indications are present with function switch at CW PEAK, PULSE PEAK, and METERED SLIDEBACK, but not at CW AVERAGE.	Open rf choke L711 in filter box assembly (fig. 45).	Remove filter box cover (fig. 51), disconnect power, and check L711 for continuity. Replace if open circuited.
		Shorted feedthru capacitor C751 (fig. 8), grounding 6.3-volt ac power to electrometer relays K1 and K2.	Check for infinite resistance from protruding terminal of C751 to chassis ground. Remove cause of grounding center conductor of feedthru capacitor.
		Defective section Z of function switch S702 (fig. 52 and 53).	Clean and repair S702, section Z, (front) or replace defective switch.
6	Meter indications are present with function switch at CW AVERAGE, PULSE PEAK, and METERED SLIDEBACK, but not at CW PEAK.	Shorted section Z of function switch S702 (fig. 52 and 53), improperly applying 6.3-volt ac power to electrometer relays K1 and K2 (fig. 59). (In this switch position (fig. 8), K1 and K2 must be deenergized.)	Clean and repair S702 section Z (front), or replace defective switch.

Step	Symptom	Probable trouble	Correction
7	Meter cannot be zeroed with control switch at ZERO ADJ.	Open or shorted ZERO ADJ variable resistor R715 (fig. 52). Open rf choke L701 in filter box assembly (fig. 45). Shorted feedthru capacitor C741 (fig. 45), grounding -150-volt power to if. amplifier bias circuit. Section W of switch S702 not supplying -150-volt potential to terminal 1 of connector J701 (fig. 10).	Disconnect operating power; use ohmmeter to check resistance of R715, and replace if defective. Check L701 for continuity; replace if open circuited. Check for infinite resistance from protruding terminal of C741 to chassis ground. Remove cause of grounding center conductor of feedthru capacitor. Check for -150 volts dc from terminal 1 of filter box assembly (fig. 45) to chassis ground. Clean and repair S702 section W, or replace defective switch.
8	Meter indications are present with function switch at CW AVERAGE, CW PEAK, and METERED SLIDEBACK, but not at PULSE PEAK.	Open meter multiplier resistor R725 (fig. 53). Terminals 3 and 4 of S702 (fig. 52 and 53), section X, not making required contact.	Use ohmmeter to check resistance of R724, and replace if open. Clean and repair S702, section X (rear), or replace defective switch.
9	Meter indications are present with function switch at CW AVERAGE, CW PEAK, and PULSE PEAK, but not at METERED SLIDEBACK.	Open resistor R709 and/or R710 (fig. 53). Open rf choke L702 in filter box assembly (fig. 45). Shorted feedthru capacitor C742 (fig. 45) grounding B- potential developed across voltage divider resistor R709.	Use ohmmeter to check reistances of R709 and R710; replace defective component. Check L702 for continuity; replace if open circuited. Check for infinite resistance from protruding terminal of C742 to chassis ground. Remove cause of grounding center conductor of feedthru capacitor.
10	Turn IMPULSE GENERATOR DB ABOVE 1μV/MC switch at OFF. With headset plugged into front-panel PHONES jack, and GAIN control rotated fully clockwise, hissing noise cannot be monitored in headset.	Low plate or screen grid voltage in amplifier, mixer, and/or oscillator stage of tuning unit. Rf or if. circuits not properly aligned.	Check all plate and screen grid voltages (fig. 47-50, as applicable for tuning unit in use). Locate defective plate and/or screen resistor, and/or bypass capacitor. Replace defective part. Refer to paragraphs 84 through 87 for rf and if. alignment procedures.
11	Same as 10 above except that, with GAIN control at midposition, oscillation (indicated by whistle or howl) is heard in headset.	Poor shielding or interstage coupling, or poor ground connections to chassis.	Ground the grid of each stage, one at a time, through 0.1-uf capacitor; work from rf input to if. output until grounding one particular stage causes oscillations (whistle or howl) to ease. Trouble is localized to that stage of which grounded grid caused end of oscillations, or in preceding stage or stages.

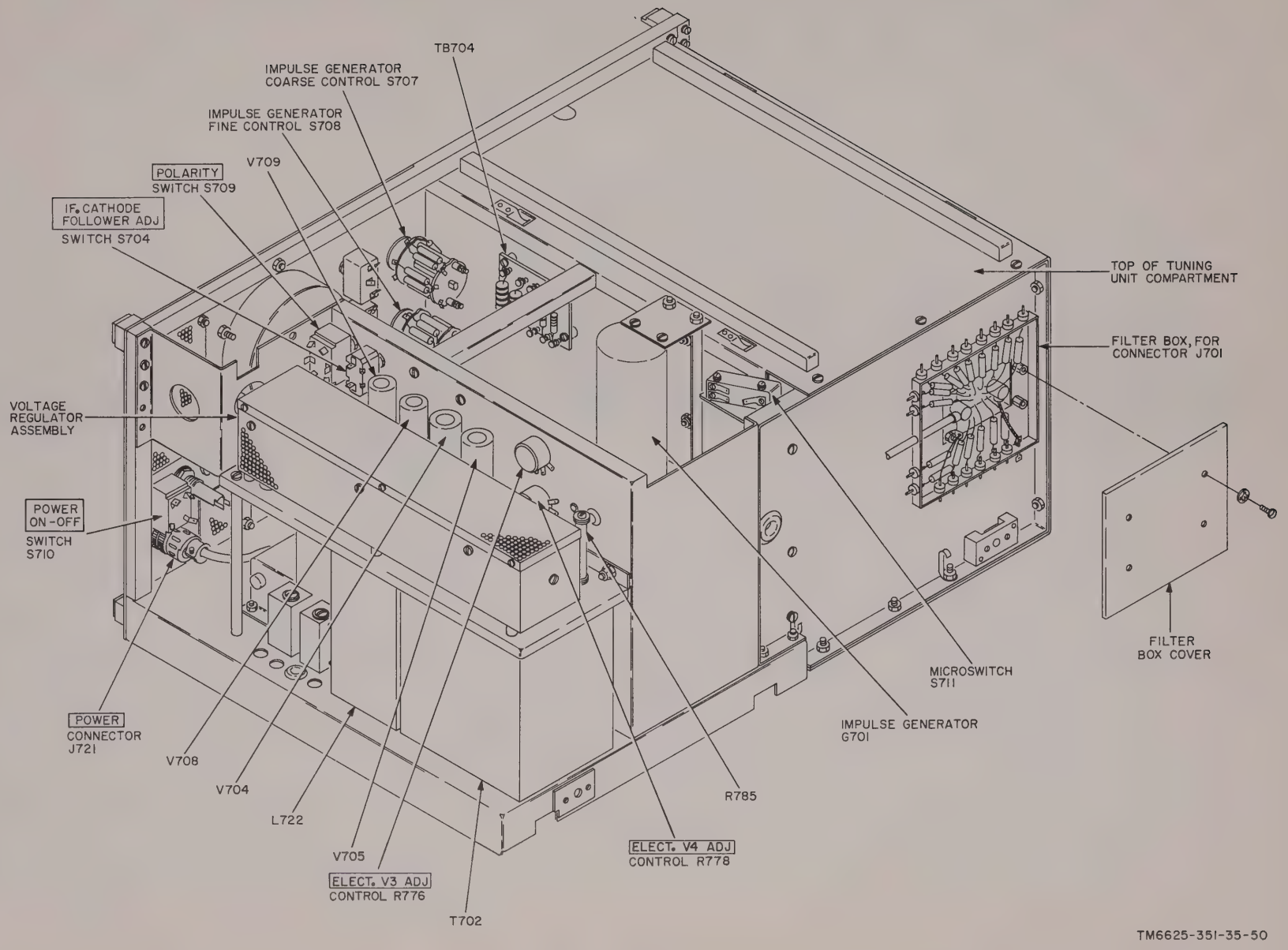

Figure 51. Main unit removed from dust cover, parts location diagram.

This page left blank intentionally.

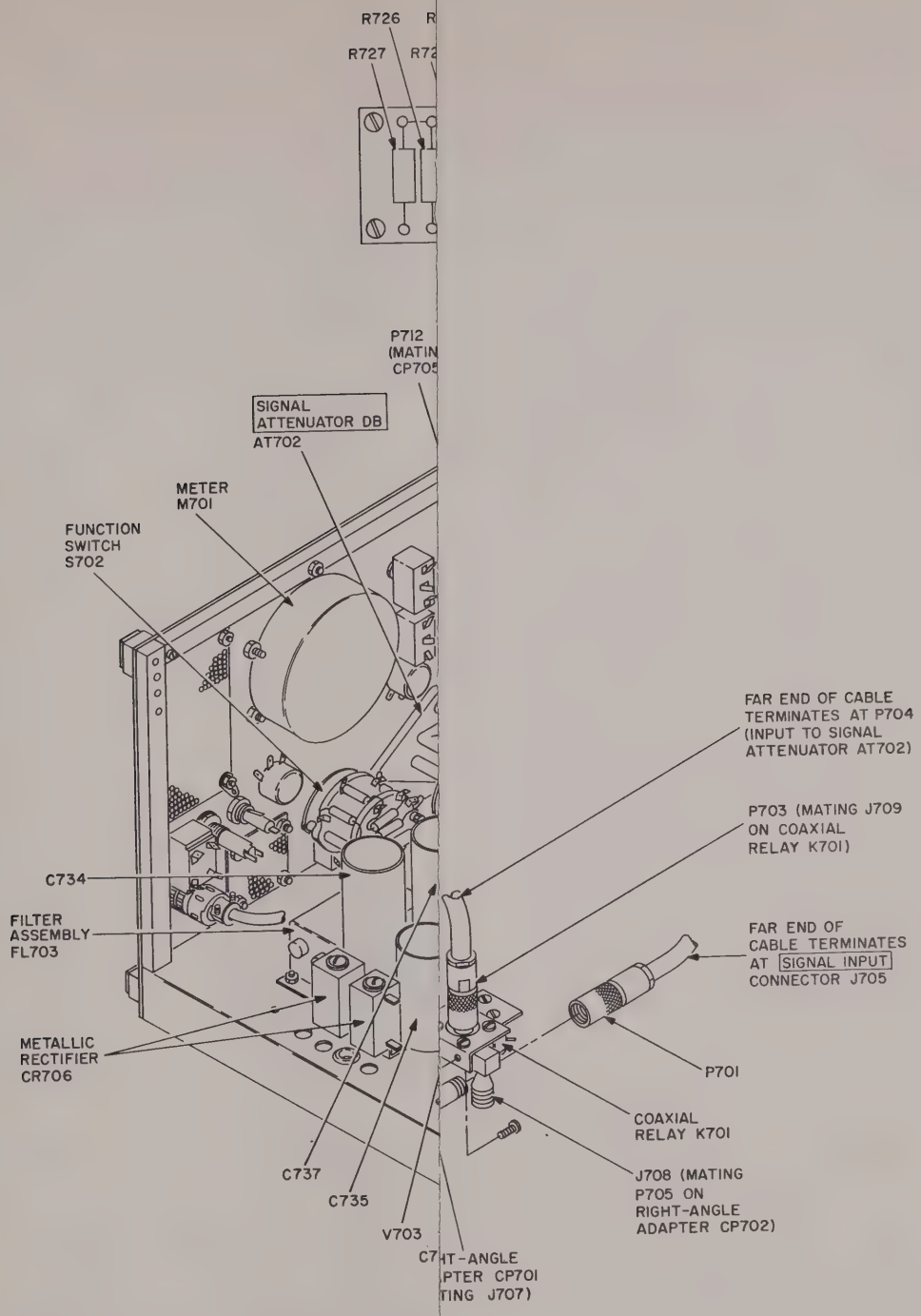

TM6625-351-35-5'

This page left blank intentionally.

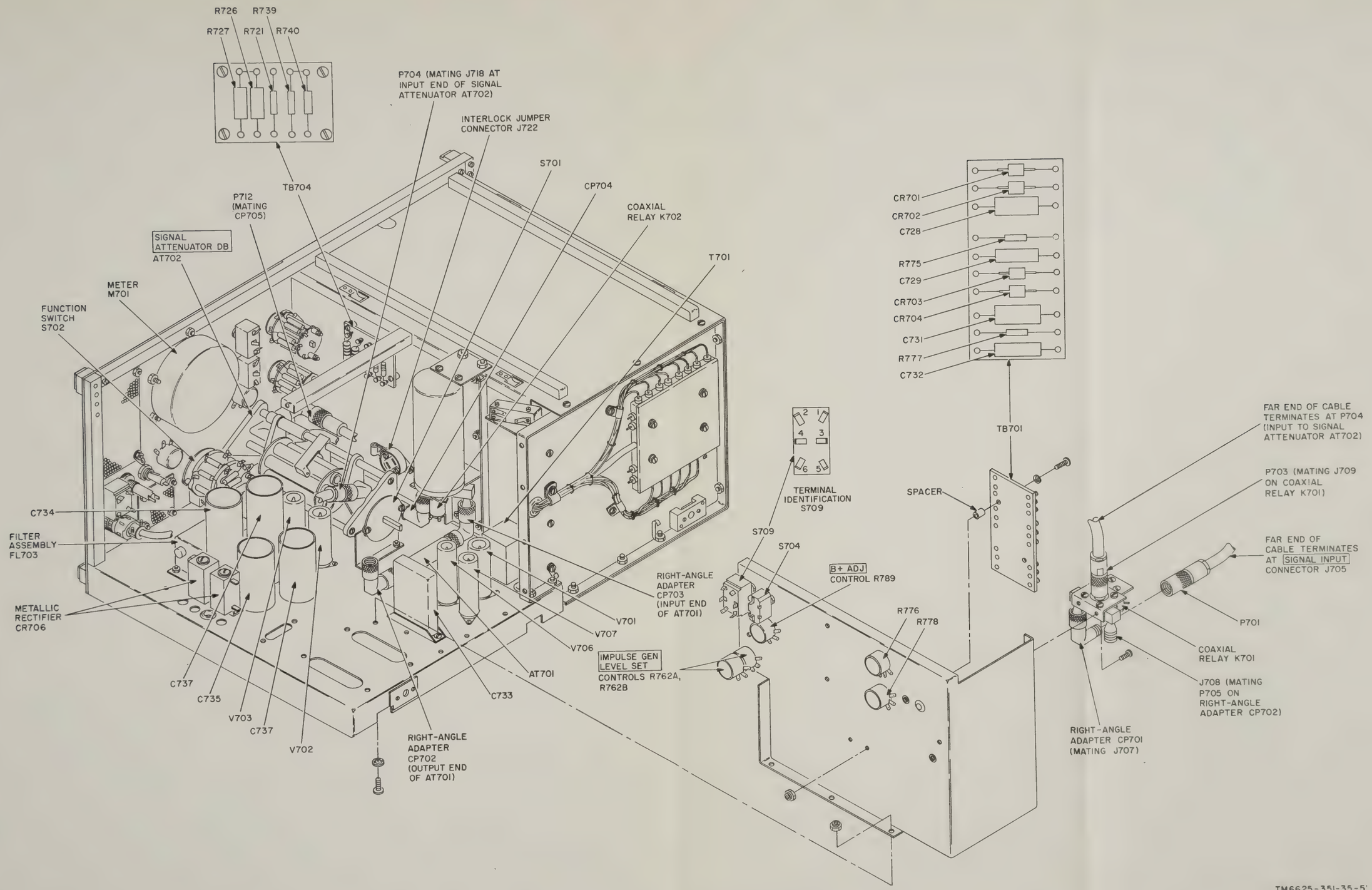

Figure 52. Main unit, top of chassis, parts location diagram.

TM6625-351-35-5

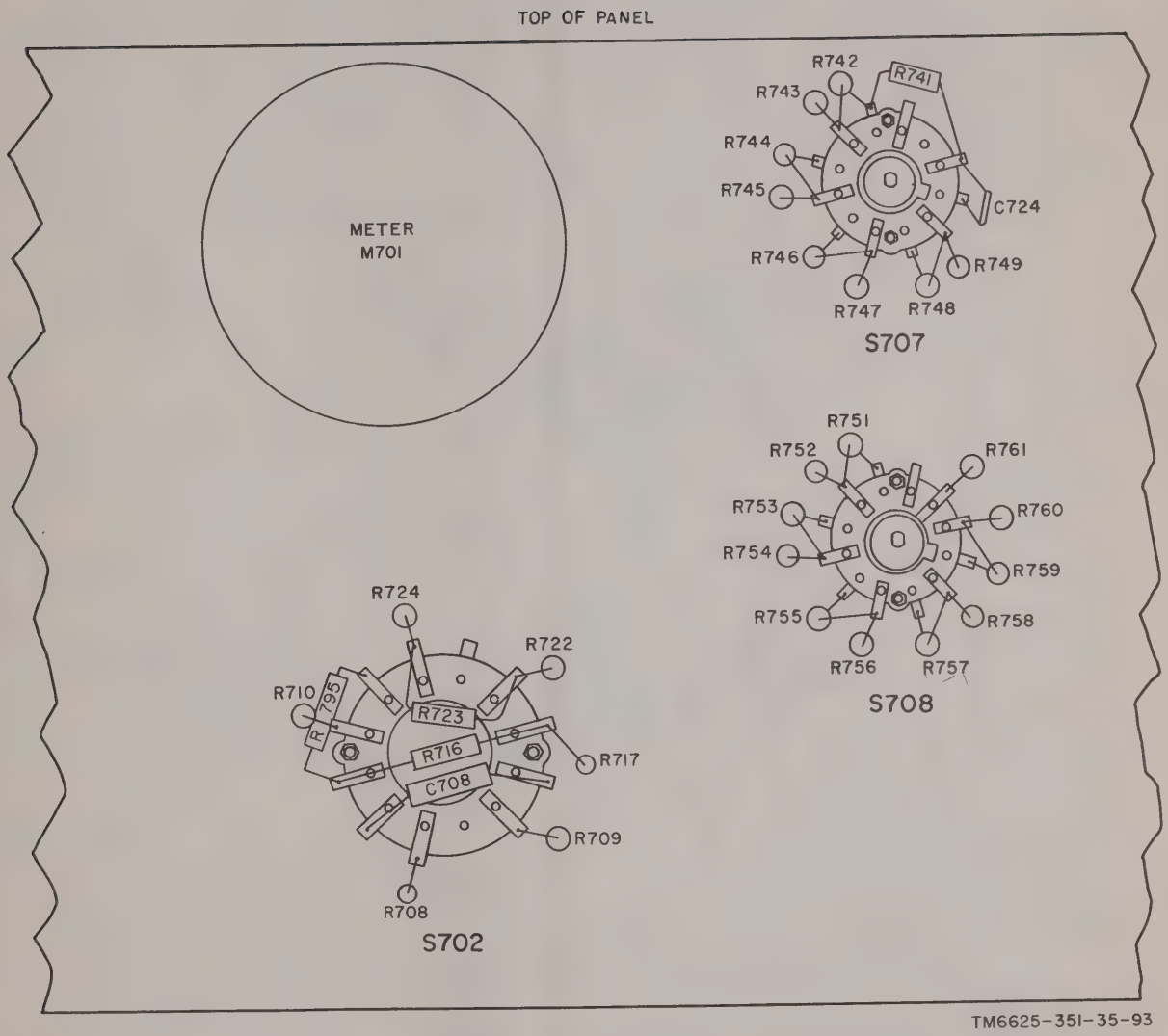

Figure 53. Main unit, rotary switches S702, S707, and S708, parts location diagram.

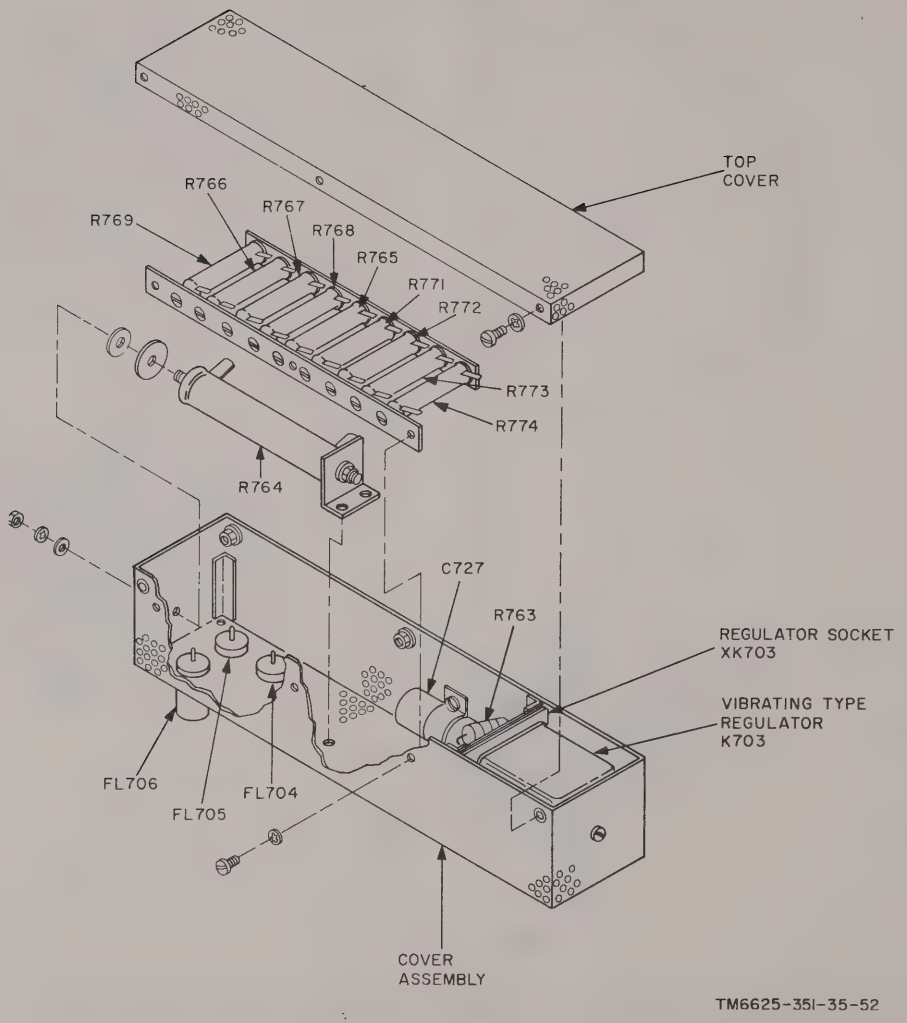

Figure 54. Voltage regulator assembly, parts location diagram.

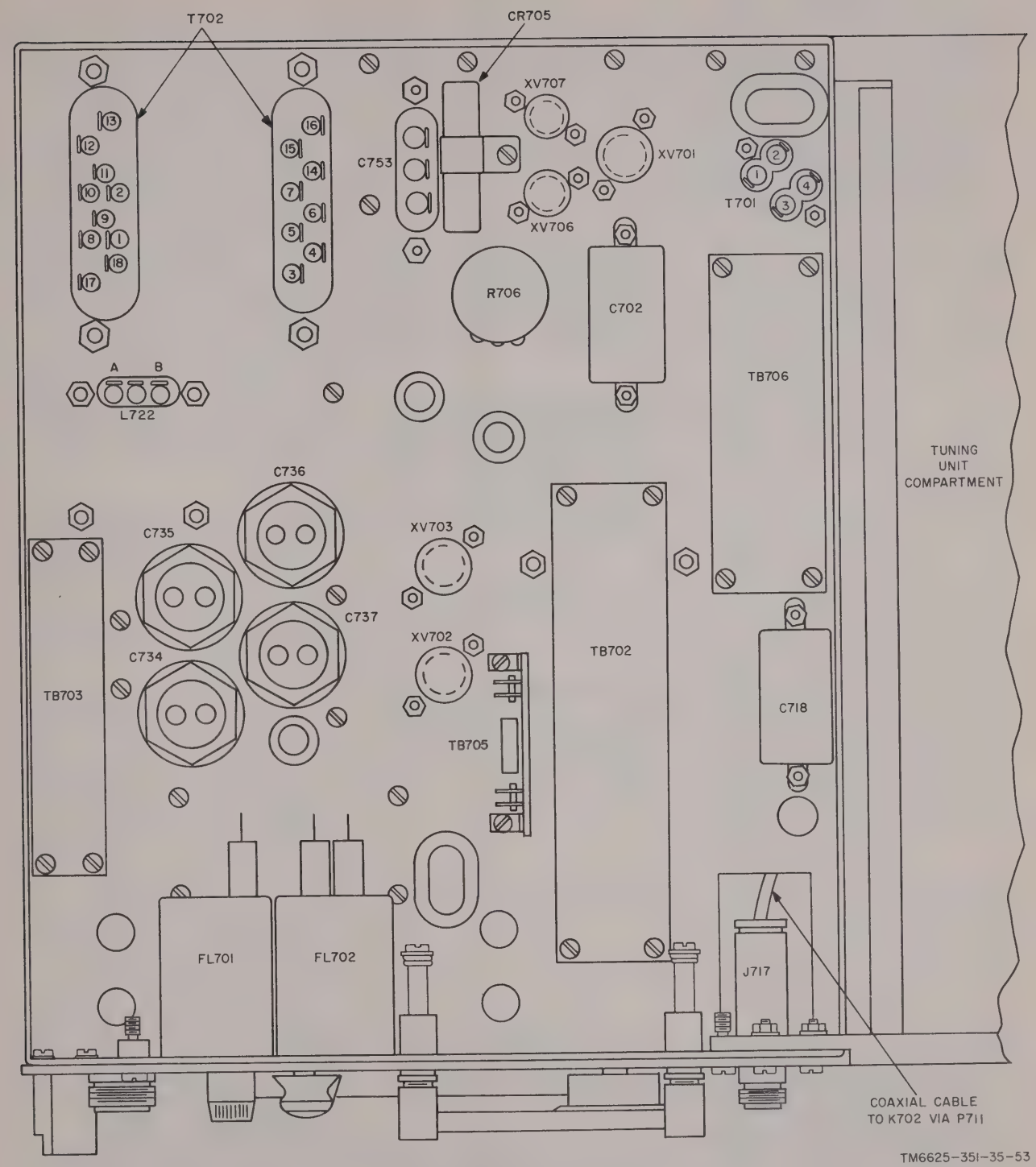

Figure 55. Main unit, bottom of chassis, parts location diagram.

(3) *Tuning unit 1.*

Step	Symptom	Probable trouble	Correction
1	Tuning unit 1 interconnected through test harness to main unit; POWER switch at ON; IMPULSE GENERATOR DB ABOVE 1μV/MC switch at ON; impulse generator output control fully clockwise; but no meter indication on any positions of MEGACYCLES band switch.	Defective connection at terminal A2 on connector P1 (fig. 56).	Check soldering of coaxial cable on tuning unit side of P1, terminal A2. Lift curved spring cover off right angle terminal A2 with screwdriver to repair connection. If either center conductor within terminal A2 or dielectric insulation is cracked or broken, replace complete connector P1.
		Poor or no connection between subminiature connector plug P9, at harness end of wires running from receptacle P1, to connector J2 on detector and electrometer assembly A1 (fig. 56).	Check for secure electrical contact between P9 and J2. If this does not remedy trouble, disconnect tuning unit connector P1 and check resistance from each terminal to chassis ground for correspondence with measurements shown in paragraph 68.
		Poor or no connection between protruding coaxial connector plug P7 on if. output selector (fig. 63), and coaxial connector jack J1 on detector and electrometer assembly (fig. 56).	Check to see that if. output selector plug P7 makes secure mechanical and electrical connection with mating jack J1.
		Faulty 455- or 1,600-kc if. amplifier (fig. 56).	Troubleshoot each if. amplifier subassembly by signal substitution (para 71). Check if. amplifiers V4 through V8.
			Warning: **Cleaning compound is flammable and its fumes are toxic. Do not use it near flame; provide adequate ventilation.**
		Fualty contacts between terminals 1 through 19 on each tuner segment with corresponding spring wiper contacts on rf tuner chassis (fig. 56, 57, and 58).	Clean terminals on tuner segments and on spring wiper contacts with Cleaning Compound (Federal stock no. 7930-395-9542) or with a crocus cloth. Work from top of tuning unit (fig. 56), and rotate the band switch to each of its six positions so that 19 terminals on each tuner segment are accessible for cleaning.
		Faulty rf tuner section (fig. 56)	Check for defective rf amplifier V1, mixer V2, and oscillator V3 in tube tester. Replace defective tube. If low indication is observed on panel-mounted test set meter after tube replacement, realignment of the rf tuner section will be required (para 87).
2	Onscale meter indications are observed with MAGACYCLES band switch at band 1 (.15-.36 mc) band 3 (.87-2.1 mc), but cannot be obtained in bands 2, 4, 5, and 6.	Faulty band switch S1 (fig. 56) --	Check for continuity of contacts in each switch position by referring to switch legend on tuning unit 1 schematic diagram (fig. 99). Repair or replace S1 if necessary.
		Defective cable connections to 1,600-kc if. amplifier, or defective 1,600-kc if. amplifier (fig. 61).	Check for secure connection of connector plug P3 with mating jack J2 on if. step attenuator AT1 subassembly (fig. 60). Also check for secure connection of connector plug P5 with mating jack J4 on if. output selector subassembly (fig.

Step	Symptom	Probable trouble	Correction
			56). If cable connections do not correct trouble, troubleshoot 1,600-kc if. amplifier to localize defective stage. Refer to voltage and resistance diagram (fig. 47) and parts location diagram (fig. 61).
		Defective electrical part in if. input selector (fig. 59).	Check with voltmeter for 150-volt B+ energizing potential at protruding terminal on feedthru capacitor C79 (input to relay K2) to chassis ground, with band switch at band 2, 4, 5, or 6. If no voltage is present, check R24 and coil of K2 for open; also check C78 and C79 for short. Replace defective component.
			Remove operating power and check primary and secondary windings of T23 for open circuit. Check C71 and C77 for short. Replace defective component.
		Defective cable connections to if. step attenuator AT1 (fig. 60).	Check for secure electrical contact between connector plug P8 and mating jack J6 on if. input selector (fig. 56 and 59) and between connector plug P2 and mating jack J1 on if. step attenuator AT1 (fig. 60). Check cable assembly W1 (fig. 56) for continuity; repair or replace if necessary.
		Defective electrical part in if. step attenuator AT1 (fig. 60).	Remove operating power and check for continuity of relays K3, K4, and K5 (fig. 60) to chassis ground. Convenient test points are at protruding center terminals of feedthru capacitors C85, C86, and C88. If open circuit is indicated at any test, suspect R31, R32, or R38 before replacing relay. If zero resistance is indicated, suspect shorted C84 or C85 (for K3), C86 or C87 (for K4), and C88 or C89 (for K5), before replacing relay.
			Remove operating power; then remove cover of if. step attenuator AT1. Check precision resistors R33 through R37 for open, short, or out-of-1% tolerance from values indicated on schematic diagram (fig. 17). Replace cover after correcting trouble.
3	Onscale meter indications are observed with MAGACYCLES band switch at band 2 (.36-.87 mc), band 4 (2.1-5.2 mc), band 5 (5.2-12.7 mc), and band 6 (12.7-30 mc), but cannot be obtained in bands 1 and 3.	Defective cable connections to 455-kc if. amplifier or defective 455-kc if. amplifier (fig. 62).	Check for secure connection of connector plug P4 with mating jack J3 on if. step attenuator AT1 subassembly (fig. 56); also check for secure connection of connector plug P6 with mating jack J5 on if. output selector subassembly. If cable connections do not correct trouble, troubleshoot 455-kc if. amplifier to localize defective stage. Refer to voltage and resistance diagram (fig. 47) and parts location diagram (fig. 62).

Step	Symptom	Probable trouble	Correction
		Defective electrical part in if. input selector (fig. 59).	Check with voltmeter for 150-volt B+ energizing potential at protruding terminal on feedthru capacitor C74 (input to relay K1) to chassis ground, with band switch at band 1 or 3. If no voltage is present, check R21 and coil of K1 for open; also check C73 and C74 for short. Replace defective component.
			Remove operating power and check primary and secondary windings of T22 and R22 for open circuit. Check C69 and C72 for short. Replace defective component.
		Defective electrical part in if. step attenuator AT1 (fig. 60).	Check with voltmeter for 150-volt B+ energizing poetential at protruding terminal of feedthru capacitor C88 (input to relay K5) to chassis ground, with band switch at band 1 or 3. If no voltage is present, check R38 for open; if this does not correct trouble, recheck contacts of S1 (fig. 56) for continuity, as indicated in S1 switch legend.
		Defective electrical part in if. output selector (fig. 63).	Check with voltmeter for 150-volt B+ energizing potential at protruding terminal of feedthru capacitor C128 (input to relay K6) to chassis ground, with band switch at band 1 or 3. If no voltage is present, remove operating power and check R61 for open circuit before replacing relay; also suspect C127 or C128 for short. Check coil of K6 for continuity to ground. Replace defective part.
4	Meter pointer deflects to left of 0 DECIBELS in all positions of MEGACYCLES band switch.	Defective detector and electrometer assembly A1 (fig. 56).	Replace defective detector and electrometer sealed assembly with one known to be operating satisfactorily in another tuning unit. If this remedies trouble, reinstall the known good detector and electrometer assembly in original tuning unit. Obtain a new A1 assembly from stock and install it in tuning unit 1.

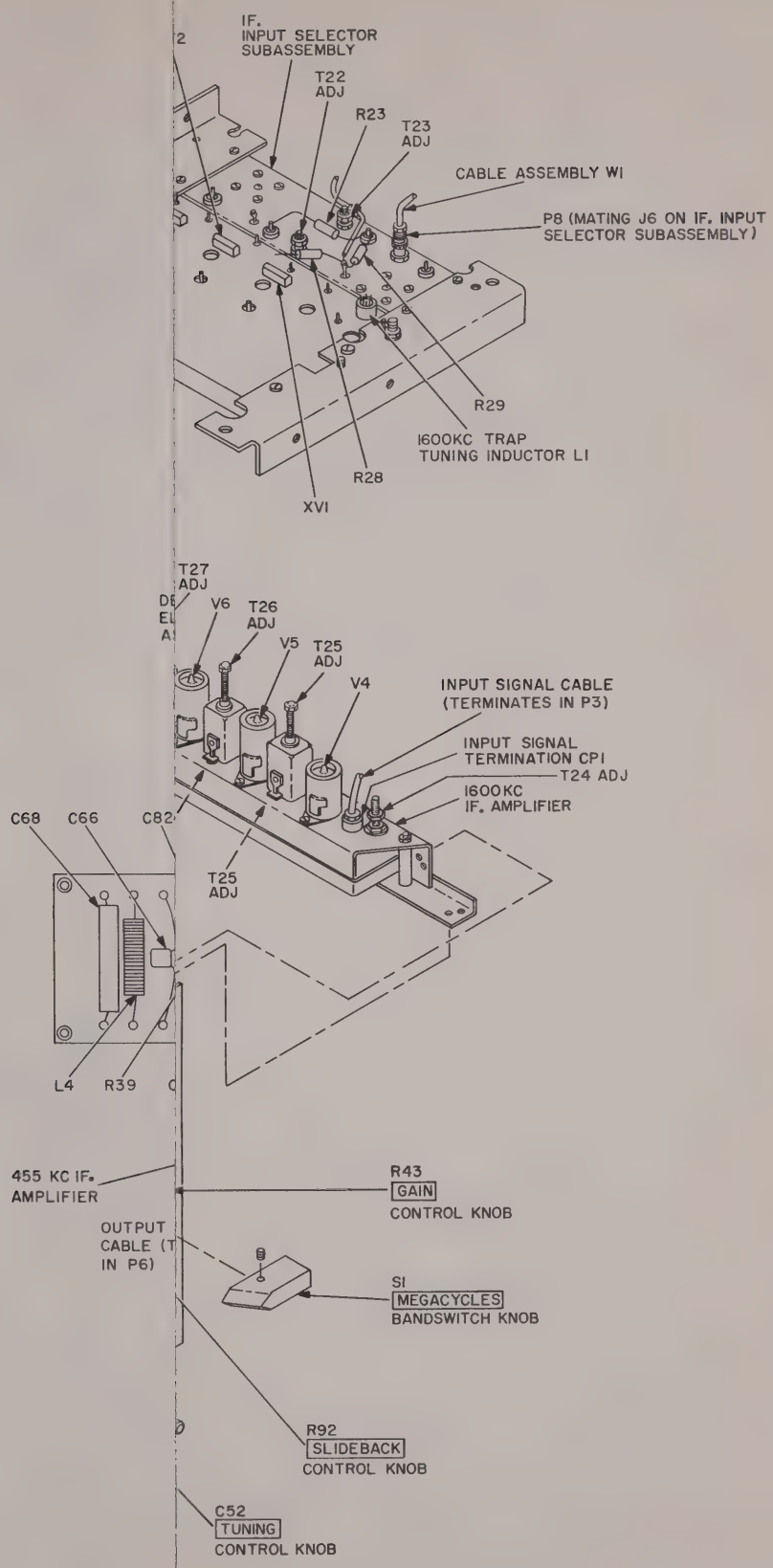
IF.
INPUT SELECTOR
SUBASSEMBLY
T22
ADJ
R23
T23
ADJ
CABLE ASSEMBLY WI
P8 (MATING J6 ON IF. INPUT
SELECTOR SUBASSEMBLY)
R29
1600KC TRAP
TUNING INDUCTOR LI
R28
XVI
T27
ADJ
V6
T26
ADJ
V5
T25
ADJ
V4
INPUT SIGNAL CABLE
(TERMINATES IN P3)
INPUT SIGNAL
TERMINATION CPI
T24 ADJ
1600KC
IF. AMPLIFIER
C68
C66
C82
T25
ADJ
L4
R39
455 KC IF.
AMPLIFIER
R43
GAIN
CONTROL KNOB
OUTPUT
CABLE (T
IN P6)
SI
MEGACYCLES
BANDSWITCH KNOB
R92
SLIDEBACK
CONTROL KNOB
C52
TUNING
CONTROL KNOB

Step	Symptom	Probable trouble	Correction
		Defective electrical part in if. input selector (fig. 59).	Check with voltmeter for 150-volt B+ energizing potential at protruding terminal on feedthru capacitor C74 (input to relay K1) to chassis ground, with band switch at band 1 or 3. If no voltage is present, check R21 and coil of K1 for open; also check C73 and C74 for short. Replace defective component.
			Remove operating power and check primary and secondary windings of T22 and R22 for open circuit. Check C69 and C72 for short. Replace defective component.
		Defective electrical part in if. step attenuator AT1 (fig. 60).	Check with voltmeter for 150-volt B+ energizing poetential at protruding terminal of feedthru capacitor C88 (input to relay K5) to chassis ground, with band switch at band 1 or 3. If no voltage is present, check R38 for open; if this does not correct trouble, recheck contacts of S1 (fig. 56) for continuity, as indicated in S1 switch legend.
		Defective electrical part in if. output selector (fig. 63).	Check with voltmeter for 150-volt B+ energizing potential at protruding terminal of feedthru capacitor C128 (input to relay K6) to chassis ground, with band switch at band 1 or 3. If no voltage is present, remove operating power and check R61 for open circuit before replacing relay; also suspect C127 or C128 for short. Check coil of K6 for continuity to ground. Replace defective part.
4	Meter pointer deflects to left of 0 DECIBELS in all positions of MEGACYCLES band switch.	Defective detector and electrometer assembly A1 (fig. 56).	Replace defective detector and electrometer sealed assembly with one known to be operating satisfactorily in another tuning unit. If this remedies trouble, reinstall the known good detector and electrometer assembly in original tuning unit. Obtain a new A1 assembly from stock and install it in tuning unit 1.

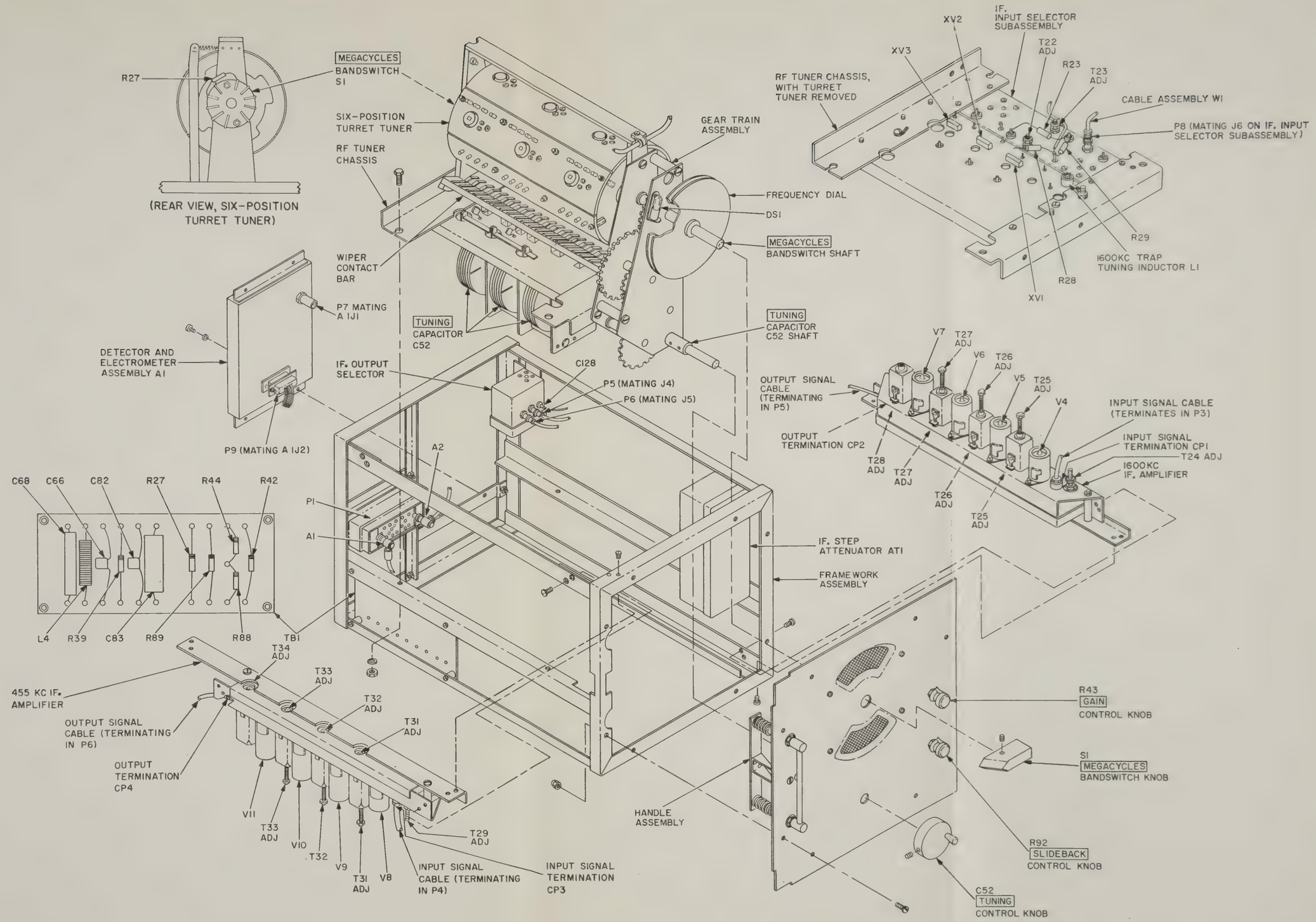

Figure 56. Tuning unit 1, parts location diagram.

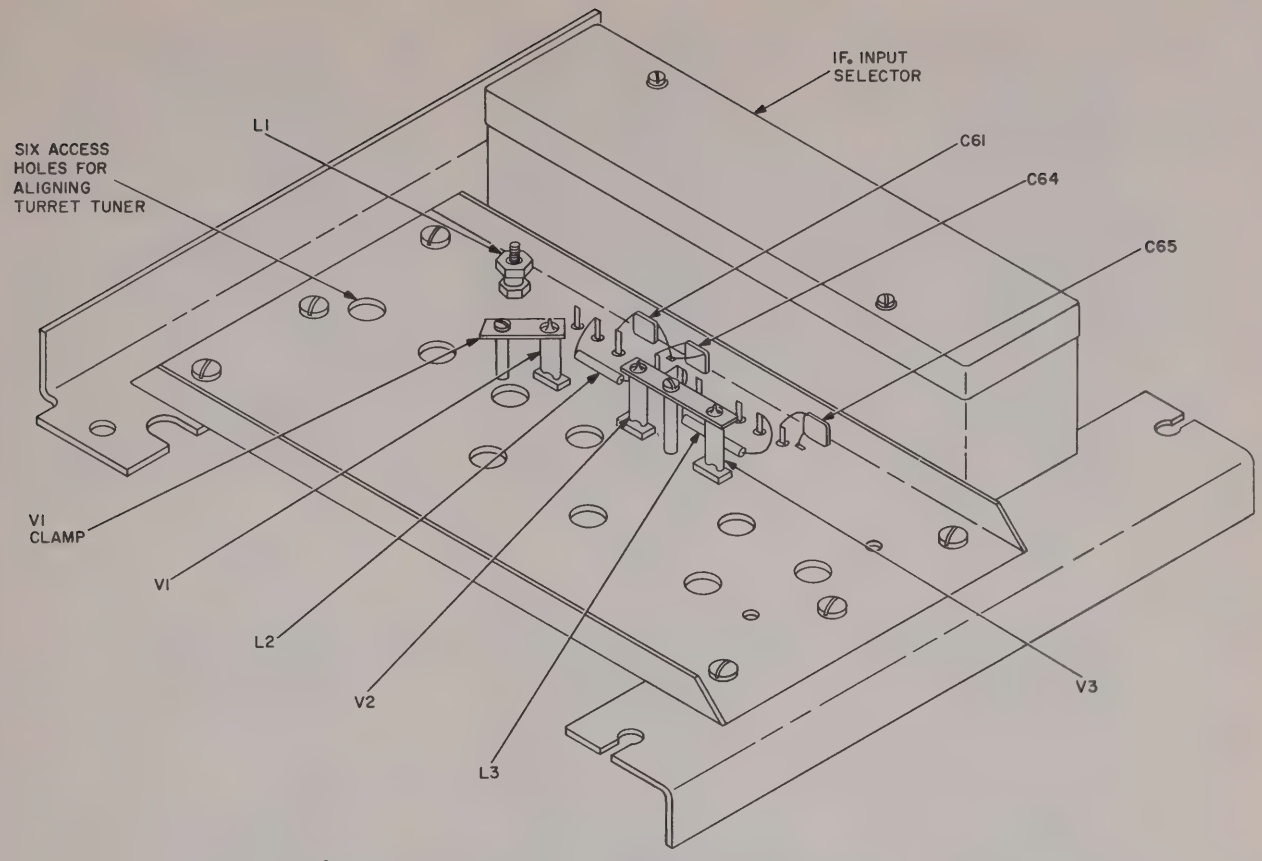

A. TUNING UNIT 1 RF CHASSIS; ELECTRON TUBE MOUNTING SIDE

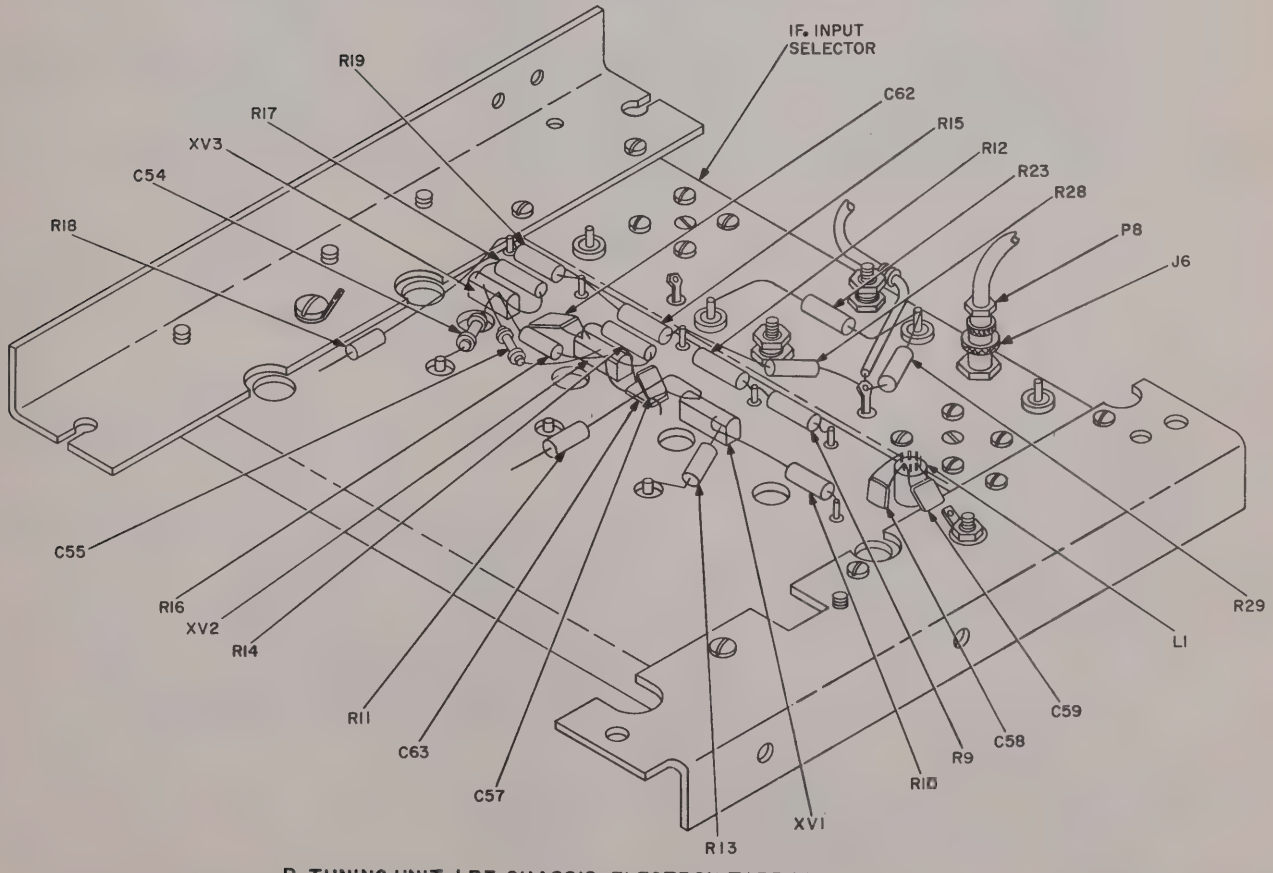

B. TUNING UNIT 1 RF CHASSIS; ELECTRON TUBE SOCKET SIDE

TM6625-351-35-56

Figure 57. Tuning unit 1, rf tuner chassis, parts location diagram.

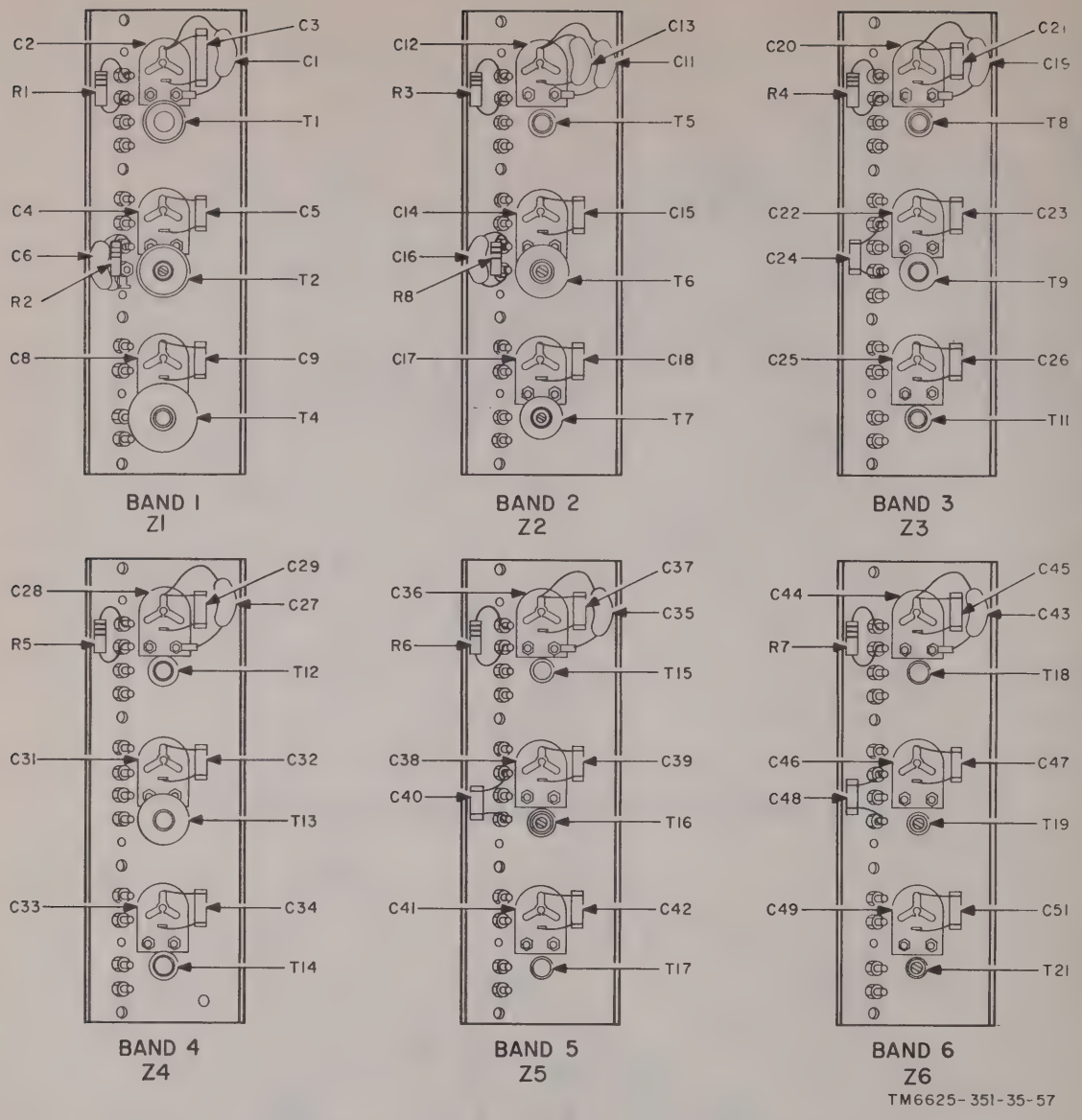

Figure 58. Tuning unit 1, turret tuner segments, parts location diagram.

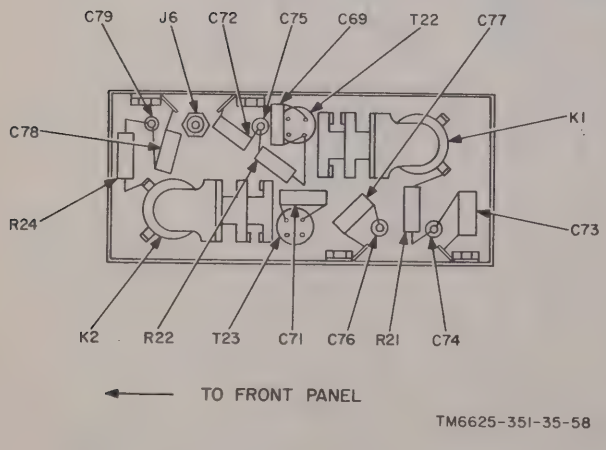

Figure 59. Tuning unit 1, if. input selector parts location diagram.

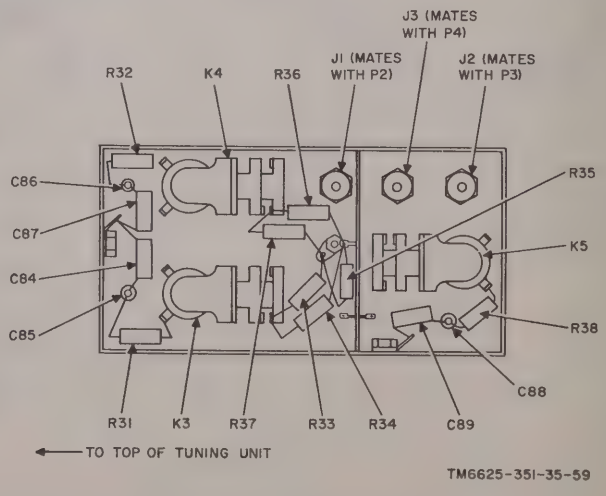

Figure 60. Tuning unit 1, if. attenuator AT1, parts location diagram.

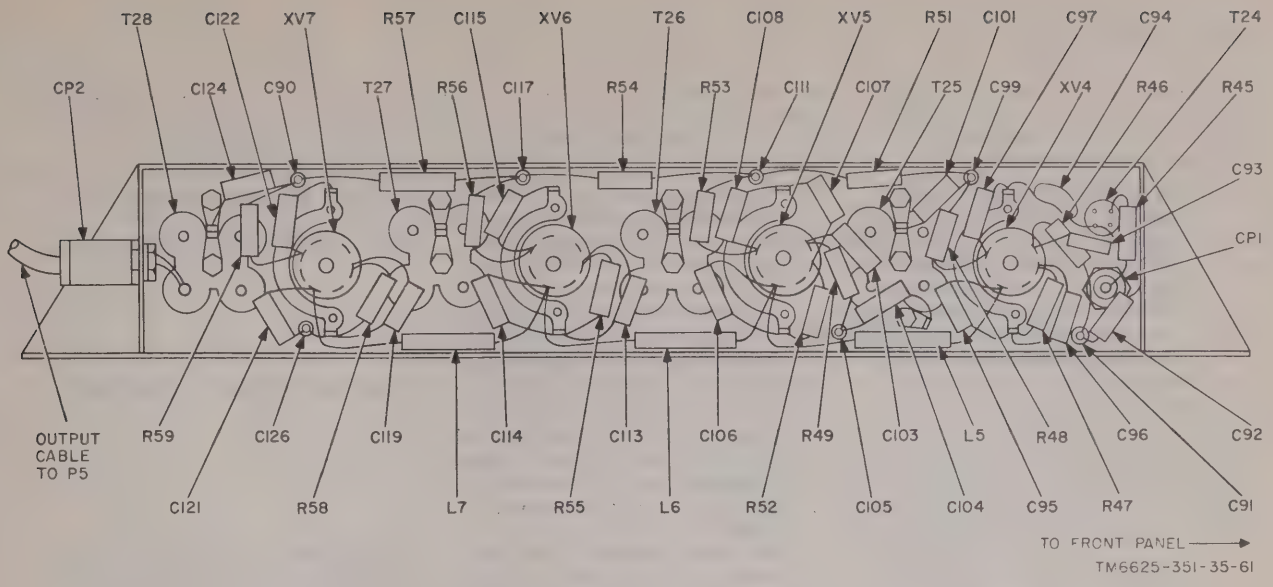

Figure 61. Tuning unit 1, 1,600-kc if. amplifier. parts location diagram.

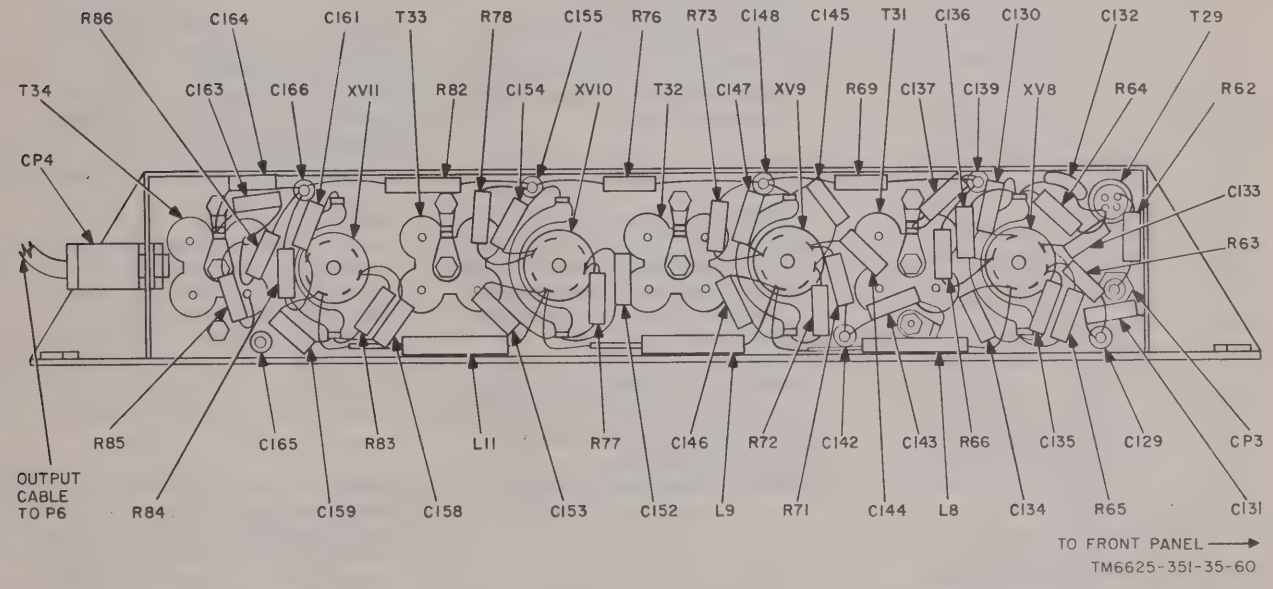

Figure 62. Tuning unit 1, 455-kc if. amplifier, parts location diagram.

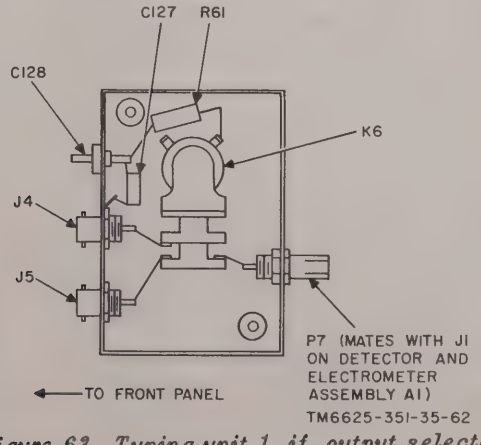

Figure 63. Tuning unit 1, if. output selector, parts location diagram.

(4) *Tuning unit 2.*

Step	Symptom	Probable trouble	Correction
1	Tuning unit 2 interconnected through test harness to main unit; POWER switch at ON; IMPULSE GENERATOR switch at ON; impulse generator output controls fully clockwise; but no meter indication at either position of FREQUENCY RANGE-MC switch.	Defective connection at terminal A2 on connector P201 (fig. 64).	Same as for step 1, tuning unit 1.
		Poor or no connection between subminiature connector plug P213 at harness end of wires running from receptacle P201 to connector J2 on detector and electrometer assembly A201.	Same as for step 1, tuning unit 1.
		Poor or no connection between protruding coaxial connector plug P212 on if. amplifier subassembly (fig. 64) and coaxial connector jack J1 on detector and electrometer assembly A201.	Same as for step 1, tuning unit 1.
		Poor or no connection between connector plug P202, which terminates coaxial cable from terminal A2 on P201 (rear of chassis), and mating jack J201 on rf tuner (fig. 65).	Check P202 and J201 for secure mechanical and electrical connection. If this does not remedy trouble, suspect if. amplifier.
		Faulty 10.7-mc if. amplifier (fig. 64).	Troubleshoot by signal substitution technique (para 72). Check V207 through V211.
		Faulty contacts on band switch S201 (fig. 65).	Check both section A and B of rotary switch S201 for continuity by referring to tuning unit 2 overall schematic diagram (fig. 100).
		Poor or no connection between connector plug P208 and mating jack J207 on rf tuner (fig. 64), or between P209 and mating jack J1 on if. step attenuator (fig. 66).	Check P208 and J201 (fig. 65) for secure mechanical and electrical connection. Disconnect cable assembly W201 from jacks J207 and AT201J1; check cable for continuity. Repair or replace if necessary.
		Poor or no connection between connector plug P211 and mating jack J2 on if. step attenuator AT201 (fig. 66).	Check P211 and J2 for secure mechanical and electrical connection.
		Inoperative rf tuner (fig. 65) ----	Check for 6.3-volt ac heater power at protruding terminal of feedthru capacitor C250. Repair wire lead connection from P201 (fig. 64), terminal 16, if necessary. Check V201 through V206.
			Check for +105-volt source of power to oscillators V203B and V206B (fig. 64) from protruding terminal of feedthru capacitor C270 to chassis ground. Repair wire lead connection from P201, terminal 3, if necessary.
			Check for +150-volt source of power to rf amplifiers V201, V202, V204, and V205, and to mixers V203A and V206A. Measure voltage at protruding terminal of feedthru capacitor C264 to chassis ground. Repair wire lead connection from top of if. amplifier at feedthru capacitor C280 if necessary.

Step	Symptom	Probable trouble	Correction
2	Meter indications are present when SIGNAL ATTENUATOR DB switch is rotated to 0 SUBST. ONLY, but pointer cannot be zeroed at 20, 40, 60, and 80, even with GAIN control set fully clockwise.	Defective if. step attenuator AT201 (fig. 66).	With operating power applied and SIGNAL ATTENUATOR DB switch at 20, check for -150-volt energizing potential from protruding terminal of feedthru capacitor C2 to chassis ground. If no voltage is present, relay K2 will be inoperative. Check continuity of wire lead from C2 to terminal 15 of connector P201 (fig. 64). Repair connections if necessary. Remove cover from if. step attenuator and remove operating power. Check for continuity from feedthru capacitor C2 to chassis ground. If infinite resistance is indicated, suspect R7 and/or coil of relay K2 for open circuit. Replace defective component. With operating power removed, check precision resistors R1 through R5 for values indicated on schematic diagram (fig. 25), within ±1% tolerance. Replace defective components.
3	Meter indications are present when SIGNAL ATTENUATOR DB switch is rotated to 0 SUBST. ONLY and to 20, but pointer cannot be zeroed at 40, 60, and 80.	Defective relay K1 in if. step attenuator AT201 (fig. 66).	With SIGNAL ATTENUATOR DB switch at positions 40, 60, or 80, check for 150-volt B- energizing potential from protruding terminal of feedthru capacitor C1 to chassis ground. If no voltage is present, relay K1 will be inoperative. Check continuity of wire lead from C1 to terminal 14 of connector P201 (fig. 64). Repair connections if necessary. Check for continuity from feedthru capacitor C1 to chassis ground. If infinite resistance is indicated, suspect R6 and/or coil of relay K1 for open circuit. Replace defective component.
4	Meter indications are present at 20-70 mc of band switch, but cannot be obtained at 70-220 mc.	Faulty contacts on band switch S201B (fig. 65).	Remove operating power. Rotate band switch to 70-220 mc and check for continuity between wiper (W) of switch S201B and primary winding (ungrounded terminal) of T203. Repair or replace defective switch.
		Faulty contacts on band switch S201A.	Reapply operating power, with band switch at 70-220 mc. Check for 150-volt B+ power at plates of V204, V205 (pin 5), and V206A (pin 6) to chassis ground. No B+ voltage at plates indicates defect between contacts Z2 and Z3 on switch S201A. Repair switch.
		Defect in 150-volt B+ line to V206A (Fig. 65).	Check R238, the primary winding of T204, and R236. Replace defective component.
		Defect in 150-volt B+ line to V205 (fig. 65).	Check for open in R237, R233, and inductor L213. Replace defective component.
		Defect in 150-volt B+ line to V204 (fig. 65).	Check for open in R224, R223, or L211. Replace defective component.

Step	Symptom	Probable trouble	Correction
		Defect in 105-volt B+ line to V206B (fig. 65).	Check R235, L214, and contact W2 and W3 of S201A. Replace defective components, or repair switch S201A.
5	Meter pointer deflects to left of 0 DECIBELS in both positions of FREQUENCY RANGE-MC band switch.	Defective detector and electrometer assembly A201 (fig. 64).	Replace defective detector and electrometer sealed assembly with one known to be operating satisfactorily in another tuning unit. If this replacement remedies trouble, reinstall known good detector and electrometer assembly in original tuning unit. Obtain new A201 assembly from stock and install it in tuning unit 2.
6	Meter indications are present at 70-220 MC of band switch, but cannot be obtained at 20-70 MC.	Faulty contacts on band switch S201B (fig. 65).	Remove operating power. Rotate band switch to 20-70 MC and check for continuity between wiper (W) of switch S201B and primary winding (ungrounded terminal) of T201. Repair or replace defective switch.
		Faulty contacts on band switch S201B (fig. 65).	Reapply operating power with band switch at 20-70 MC. Check for 150-volt B+ power at plates of V201, V202, and V203A (pin 1) to chassis ground. No B+ voltage at plates indicates defect between contacts Z1 and Z2 on switch S201A. Repair switch.
		Defect in 150-volt B+ line to V203A (fig. 65).	Check the primary winding of T202, and resistors R217 and R219. Replace defective component.
		Defect in 150-volt B+ line to V202 (fig. 65).	Check for open in R214 or R218. Replace defective component.
		Defect in 150-volt B+ line to V201 (fig. 65).	Check for open in R209 and replace if necessary.
		Defect in 105-volt B+ line to oscillator V203B plate, pin 6.	Check for open in R216 or trouble in contacts W1 and W2 of S201A. Replace defective resistor or repair switch S201A.

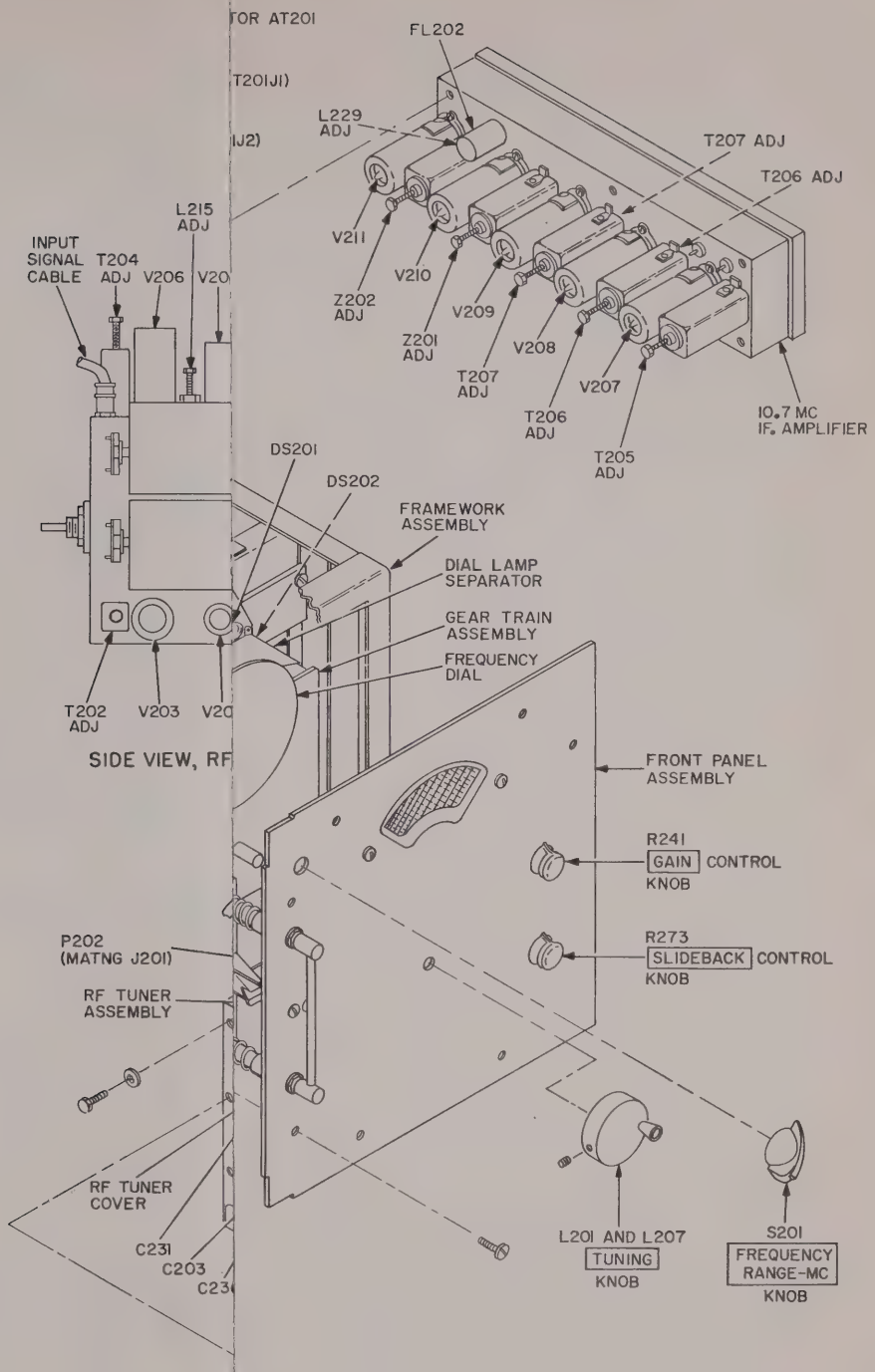

TM6625-351-35-63

Step	Symptom	Probable trouble	Correction
		Defect in 105-volt B+ line to V206B (fig. 65).	Check R235, L214, and contact W2 and W3 of S201A. Replace defective components, or repair switch S201A.
5	Meter pointer deflects to left of 0 DECIBELS in both positions of FREQUENCY RANGE-MC band switch.	Defective detector and electrometer assembly A201 (fig. 64).	Replace defective detector and electrometer sealed assembly with one known to be operating satisfactorily in another tuning unit. If this replacement remedies trouble, reinstall known good detector and electrometer assembly in original tuning unit. Obtain new A201 assembly from stock and install it in tuning unit 2.
6	Meter indications are present at 70-220 MC of band switch, but cannot be obtained at 20-70 MC.	Faulty contacts on band switch S201B (fig. 65).	Remove operating power. Rotate band switch to 20-70 MC and check for continuity between wiper (W) of switch S201B and primary winding (ungrounded terminal) of T201. Repair or replace defective switch.
		Faulty contacts on band switch S201B (fig. 65).	Reapply operating power with band switch at 20-70 MC. Check for 150-volt B+ power at plates of V201, V202, and V203A (pin 1) to chassis ground. No B+ voltage at plates indicates defect between contacts Z1 and Z2 on switch S201A. Repair switch.
		Defect in 150-volt B+ line to V203A (fig. 65).	Check the primary winding of T202, and resistors R217 and R219. Replace defective component.
		Defect in 150-volt B+ line to V202 (fig. 65).	Check for open in R214 or R218. Replace defective component.
		Defect in 150-volt B+ line to V201 (fig. 65).	Check for open in R209 and replace if necessary.
		Defect in 105-volt B+ line to oscillator V203B plate, pin 6.	Check for open in R216 or trouble in contacts W1 and W2 of S201A. Replace defective resistor or repair switch S201A.

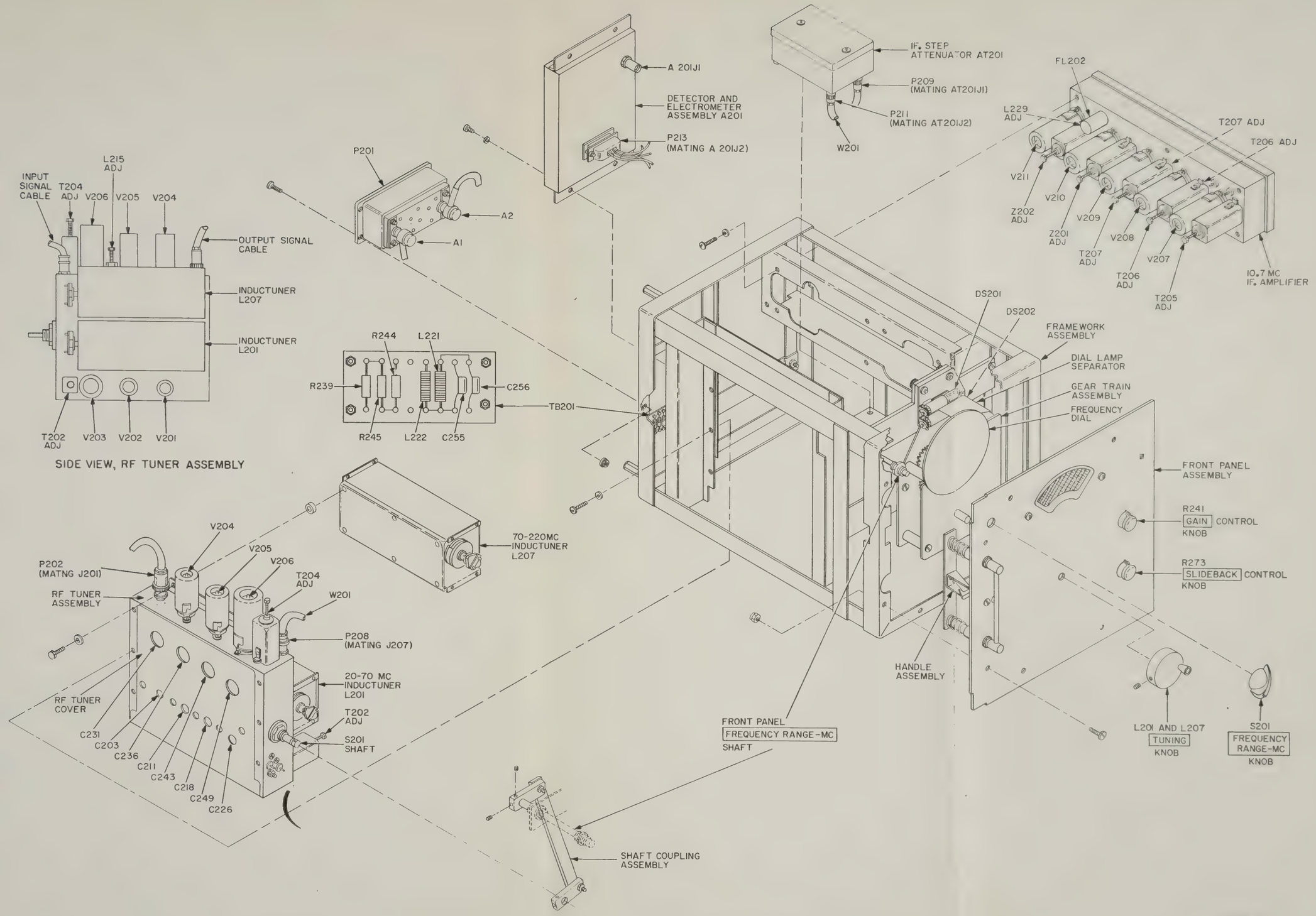

Figure 64. Tuning unit 2, parts location diagram.

TM6625-351-35-63

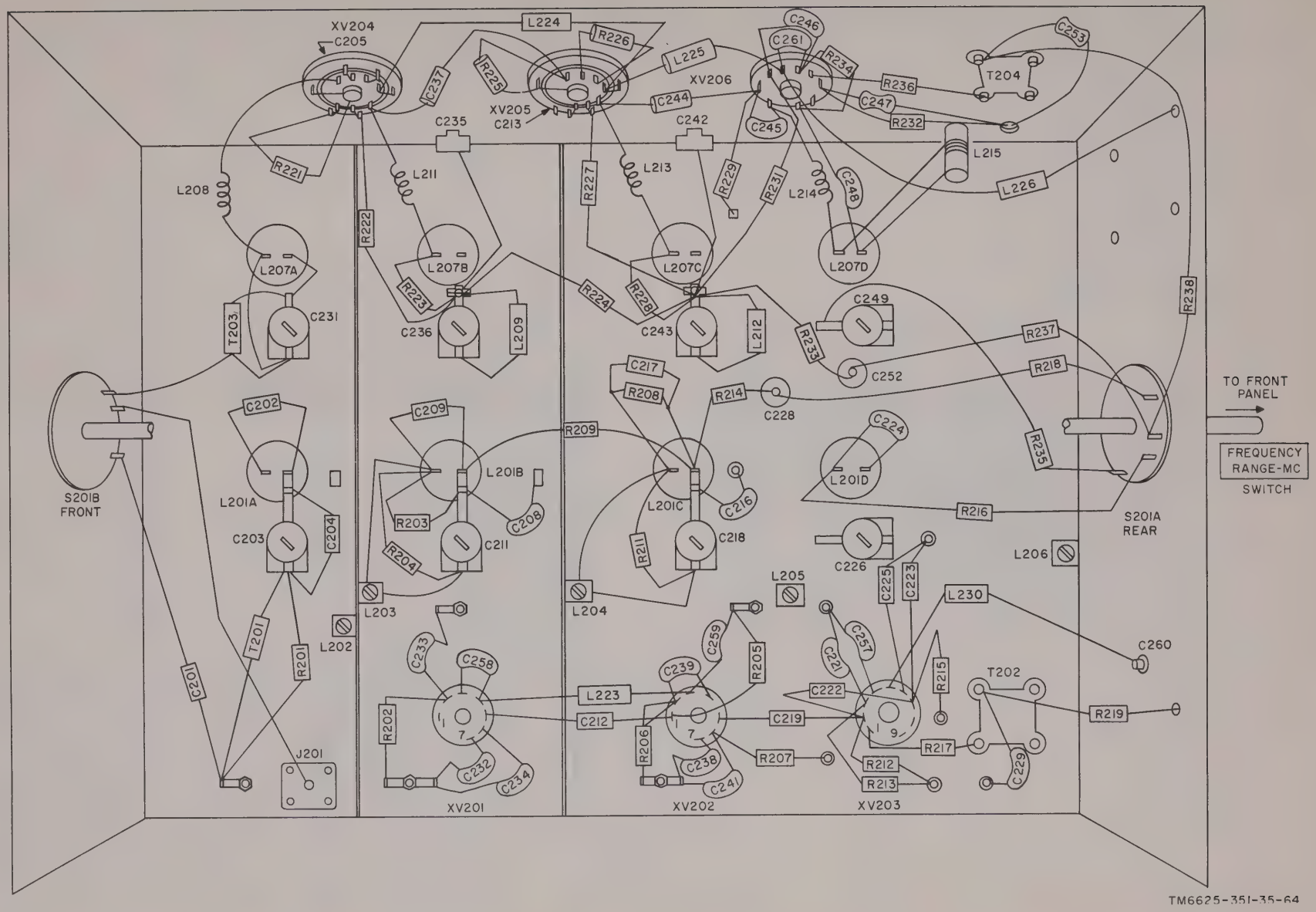

Figure 65. Tuning unit 2, rf tuner cover removed, parts location diagram.

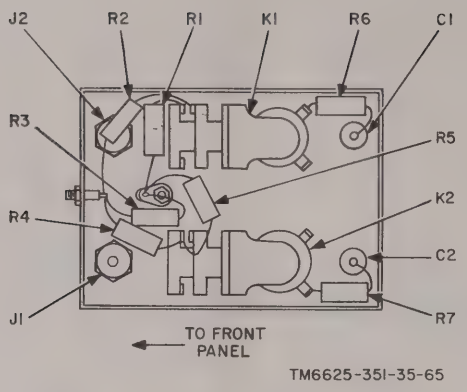

Figure 66. Tuning units 2, 3, and 4, if. step attenuator, parts location diagram.

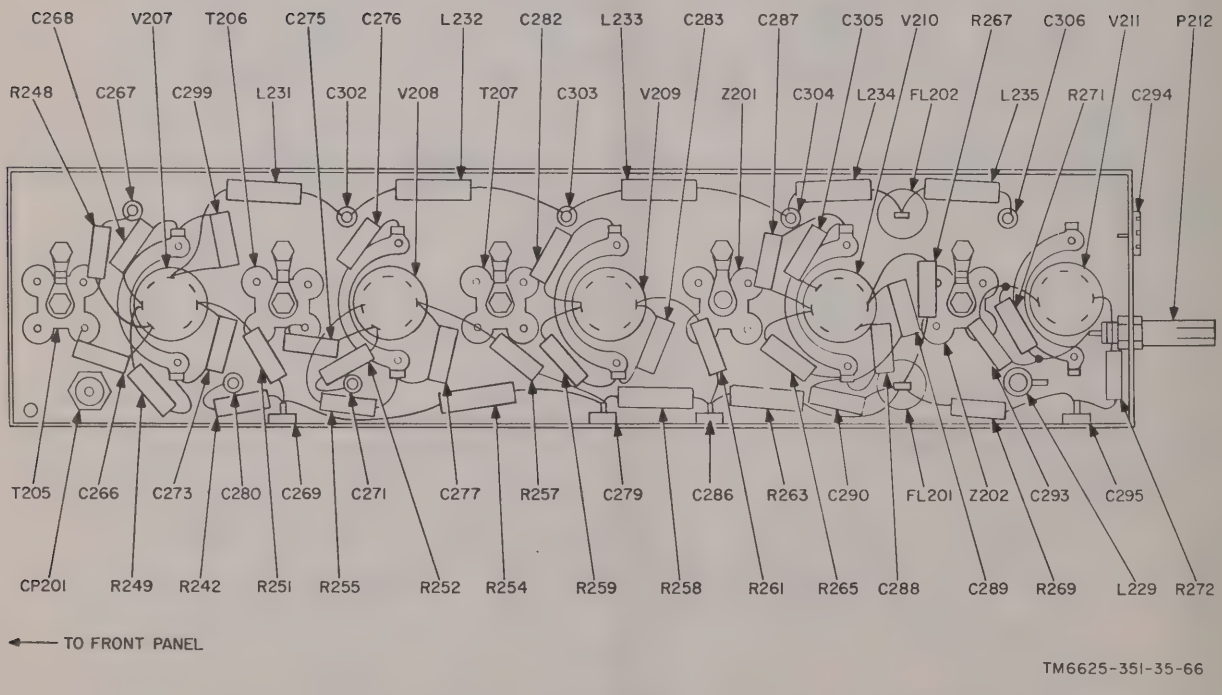

Figure 67. Tuning unit 2, if. amplifier, parts location diagram.

(5) *Tuning unit 3.*

Step	Symptom	Probable trouble	Correction
1	Tuning unit 3 interconnected through test harness to main unit; POWER switch at ON; INPULSE GENERATOR DB ABOVE 1 V/MC switch S705 at ON; impulse generator output controls fully clockwise; but no meter indication.	Defective connection at terminal A2 on connector P401 (fig. 68).	Same as for step 1, tuning unit 1.
		Poor or no connection between subminiature connector plug P414 at harness end of wires running from receptacle P401 to connector J2 on detector and electrometer assembly A401.	Same as for step 1, tuning unit 1.
		Poor or no connection between protruding coaxial connector plug P413 on if. amplifier subassembly (fig. 68), and coaxial connector jack J1 on detector and electrometer assembly A401.	Same as for step 1, tuning unit 1.
		Poor or no connection between connector plug P402, which terminates coaxial cable from terminal A2 on P401 (rear of chassis), and mating jack J401 of right-angle adapter CP401 (fig. 68).	Check P402 and J401 for secure mechanical and electrical connection.
		Poor or no connection between connector plug P403 of right-angle adapter CP401 and input jack J402 of bandpass filter FL401 (fig. 68).	Check P403 and J402 for secure mechanical and electrical connection. If this does not remedy trouble, check inner conductor of CP401 for continuity from J401 to J402. Also check for infinite resistance between inner conductor of CP401 and outer shell. Replace adapter if defective.
		Poor or no connection between output jack J403 of bandpass filter FL401 and mating plug P404 of right-angle adapter CP402 (fig. 68).	Check J403 and P404 for secure mechanical and electrical connection.
		Poor or no connection between jack J404 of right-angle adapter CP402 and mating plug P405 of coaxial cable assembly W401 (fig. 68).	Check J404 and P405 for secure mechanical and electrical connection. If this does not remedy trouble, check inner conductor of CP402 for continuity from P404 to J404. Also check for infinite resistance between inner conductor and outer shell. Replace adapter if defective.
		Poor or no connection between connector plug P406 of coaxial cable assembly W401 and mating jack J405 on rf tuner (fig. 69).	Check P406 and J405 for secure mechanical and electrical connection. If this does not remedy trouble, check inner conductor of cable assembly W401 for continuity from P405 to P406. Also check for infinite resistance between inner conductor and outer shell. Repair or replace cable assembly W401 if defective.
		No driving power from rf tuner to 42-mc if. preamplifier (fig. 70).	Check for secure connections of cable assembly W402. Be sure that connector plug P407 securely mates rf tuner output jack J406 (fig. 68), and that plug P408 securely mates if. preamplifier input jack J407 (fig. 70). If this does not remedy trouble, disconnect cable assembly W402 and

Step	Symptom	Probable trouble	Correction
			perform continuity and infinite resistance checks, as outlined in procedure immediately above.
		No driving power from if. preamplifier to if. step attenuator AT401 (fig. 68).	Check for secure connections of cable assembly W403. Be sure that connector plug P409 (fig. 68) mates if. preamplifier output jack J408 (fig. 70), and that plug P410 mates if. step attenuator jack AT401J1 (fig. 68). If this does not remedy trouble, disconnect cable assembly W403 and perform continuity and infinite resistance checks as outlined for cable assembly W401.
		No driving power from if. step attenuator AT401 (fig. 68) to if. amplifier (fig. 71).	Check for secure connection of connector plug P412 to mating jack AT401J2 on if. step attenuator (fig. 68). Opposite end of this coaxial cable is soldered to termination CP411 at input to if. amplifier (fig. 71). Check and repair solder connection if open circuit is suspected. If this does not remedy trouble, suspect if. preamplifier and/or if amplifier.
		Faulty if. preamplifier circuit (fig. 70).	Troubleshoot by signal substitution technique (para 73). Check V403, V404, and V405 (fig. 68).
		Faulty if. amplifier circuit (fig. 71).	Troubleshoot by signal substitution technique (para 73). Check V406 through V410 (fig. 68).
		Inoperative rf tuner (fig. 69) ----	Check for 6.3-volt ac heater power at protruding terminal of feedthru capacitor C411 (fig. 69). Repair wire lead connection from feedthru capacitor C430 at electron tube side of if. amplifier. If this does not remedy trouble, disconnect operating power and check rf choke L414 for open circuit. Replace L414 if defective. Replace V402.
			Check for +105-volt source of power to oscillator V402 from protruding terminal of feedthru capacitor C422 to chassis ground. If no voltage is indicated, check R409 for open circuit. Repair wire lead connection from high-voltage terminal of R409 to connector P401 (fig. 68), terminal 3, if necessary.
			Check for B+ voltage to rf amplifier V401 by measuring voltage from protruding terminal of feedthru capacitor C410 to chassis ground. Proper voltage will be somewhat less than 150 volts, depending on setting of V401 ADJ control R405 (fig. 68). No voltage at C410 indicates defect in R402, variable resistor R405 or R420, or in wire lead which is soldered to P401, terminal 2. Replace defective component and/or repair lead connection.

Step	Symptom	Probable trouble	Correction
2	Meter indications are present when SIGNAL ATTENUATOR DB control is rotated to 0 SUBST. ONLY, but pointer cannot be zeroed in 20, 40, 60, and 80, even with GAIN control set fully clockwise.	Defective relay K2 or resistors R1 through R5 in if. step attenuator AT401 (fig. 66).	Same as for tuning unit 2, step 2. If. step attenuators are identical and interchangeable in tuning units 2, 3, and 4.
3	Meter indications are present when SIGNAL ATTENUATOR DB switch is rotated to 0 SUBST. ONLY and to 20, but pointer cannot be zeroed at 40, 60, and 80.	Defective relay K1 in if. step attenuator AT401 (fig. 66).	Same as for tuning unit 2, step 3.
4	On scale meter indications are present, but full-scale pointer deflection cannot be obtained throughout the band, even with GAIN control rotated fully clockwise during rotation of TUNING control throughout the 200-400 mc range.	Defective crystal mixer CR401 (fig. 69). Defective or marginal electron tube V401 (fig. 69).	Replace CR401 with another crystal diode known to be in satisfactory operating condition. If this does not remedy trouble, suspect rf amplifier tube V401. Replace V401 with another coplanar triode known to be in satisfactory operating condition. (See fig. 49 for identification of V401 elements.)
5	Meter pointer deflects to left of 0 DECIBELS instead of showing onscale indications.	Defective detector and electrometer assembly A401 (fig. 68).	Replace defective detector and electrometer sealed assembly with one known to be operating satisfactorily in another tuning unit. If this remedies trouble, reinstall known good detector and electrometer assembly in original tuning unit. Install new A401 assembly in tuning unit 3 (fig. 68).
6	Monitor output signal by plugging headset, through headset cord, into PHONES jack. Intermittent scratchy sound is heard while scanning throughout the band (rotating TUNING dial over the 200-400-mc frequency range).	Dirt or other foreign matter has lodged itself between rotor and stator plates of 3-gang TUNING capacitor (C402, C404, and C413) in rf tuner (fig. 69).	***Warning:*** **Cleaning compound is flammable and its fumes are toxic. Do not use it near a flame; provide adequate ventilation.** Flush or clean segments of variable capacitors C402, C404, and C413 with cleaning compound.

This page left blank intentionally.

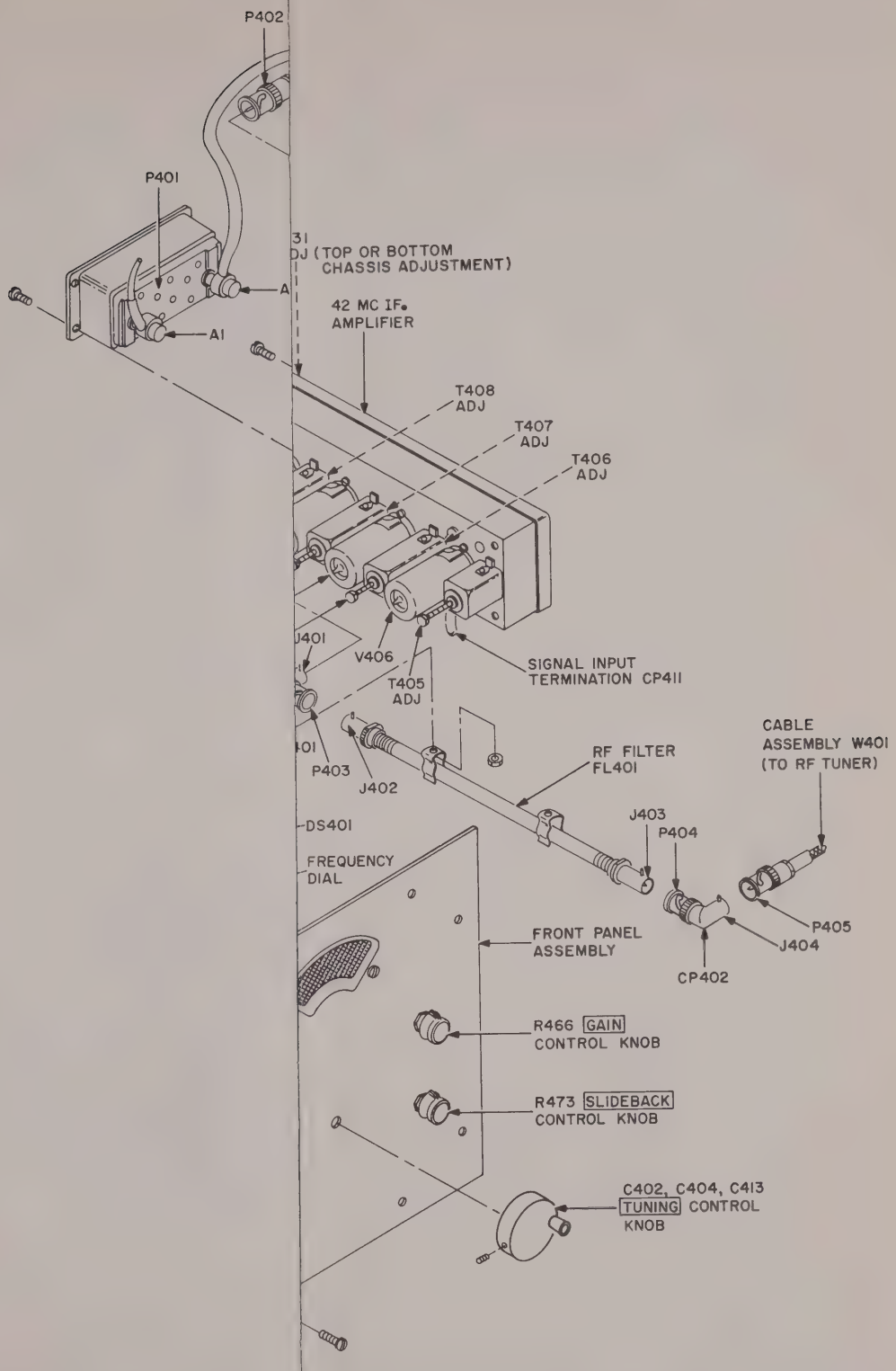
P402
P401
31
DJ (TOP OR BOTTOM
CHASSIS ADJUSTMENT)
A
A1
42 MC IF.
AMPLIFIER
T408
ADJ
T407
ADJ
T406
ADJ
J401
V406
T405
ADJ
SIGNAL INPUT
TERMINATION CP411
CABLE
ASSEMBLY W401
(TO RF TUNER)
RF FILTER
FL401
P403
J402
J403
P404
DS401
FREQUENCY
DIAL
P405
J404
FRONT PANEL
ASSEMBLY
CP402
R466 GAIN
CONTROL KNOB
R473 SLIDEBACK
CONTROL KNOB
C402, C404, C413
TUNING CONTROL
KNOB

This page left blank intentionally.

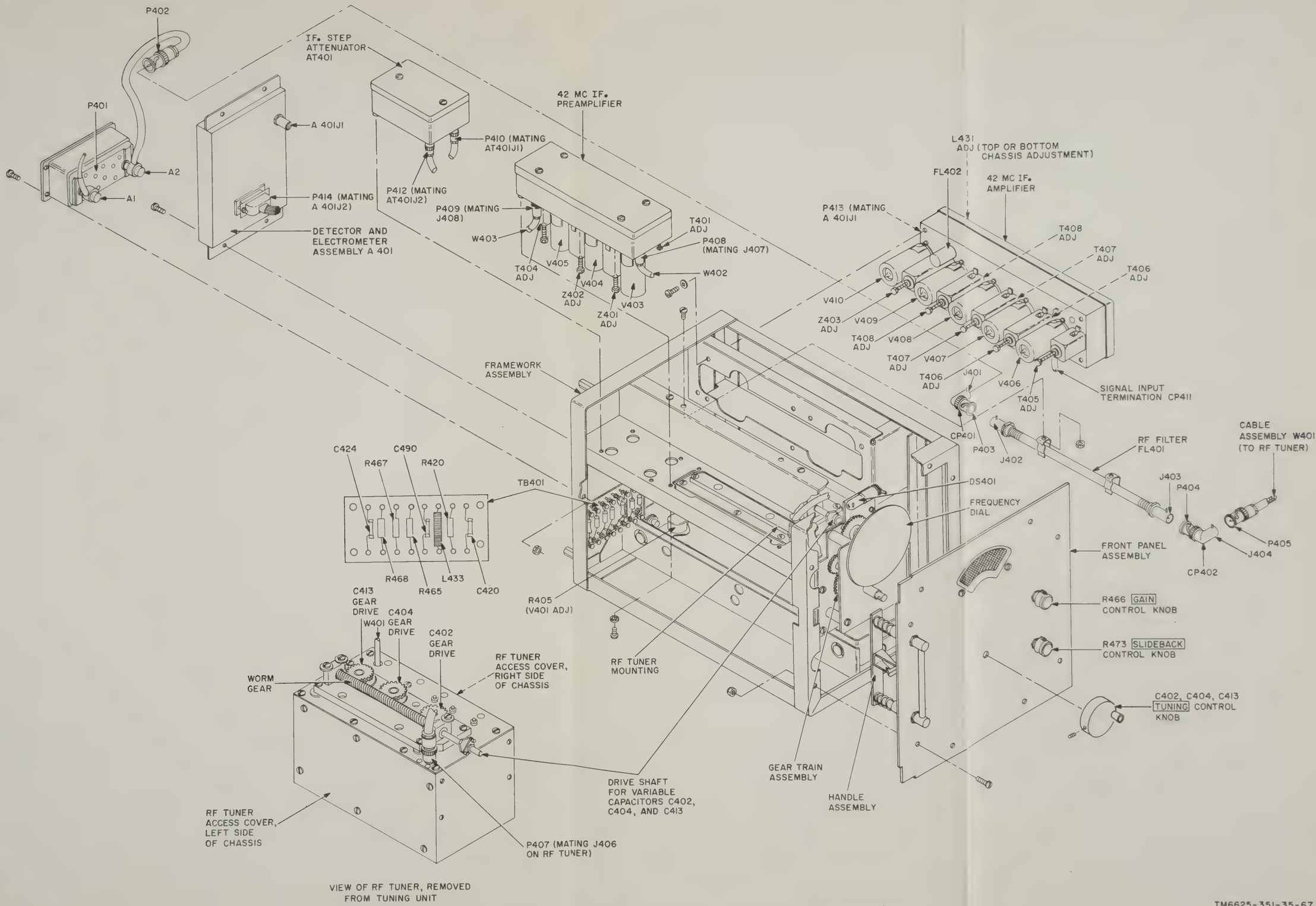

Figure 68. Tuning unit 3, parts location diagram.

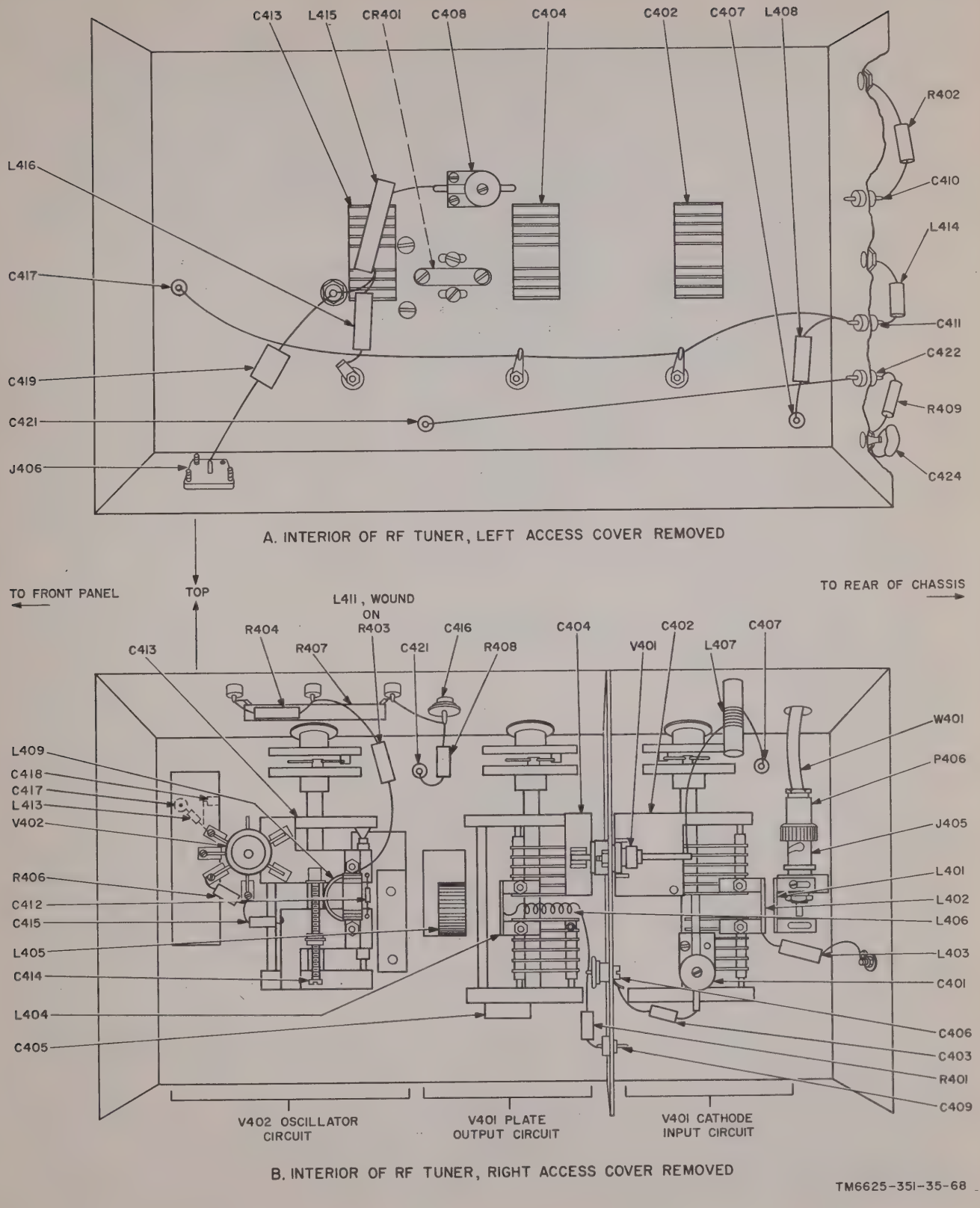

Figure 69. Tuning unit 3, interior of rf tuner, parts location diagram.

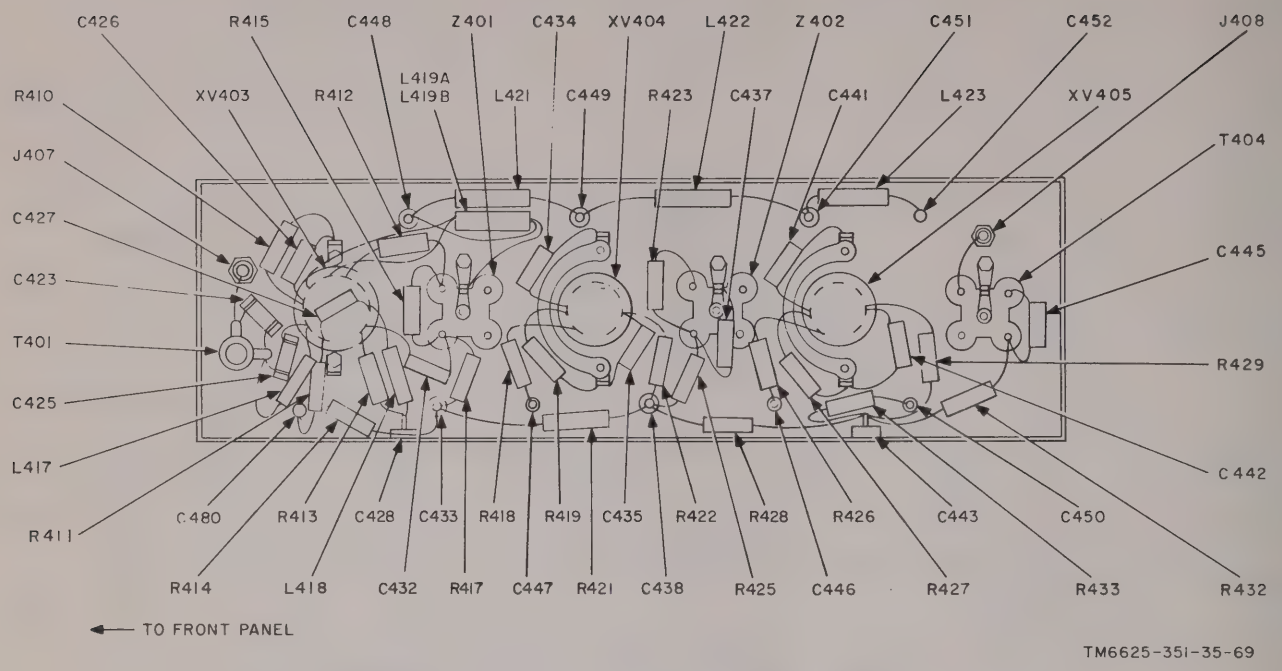

Figure 70. Tuning unit 3, if. preamplifier, parts location diagram.

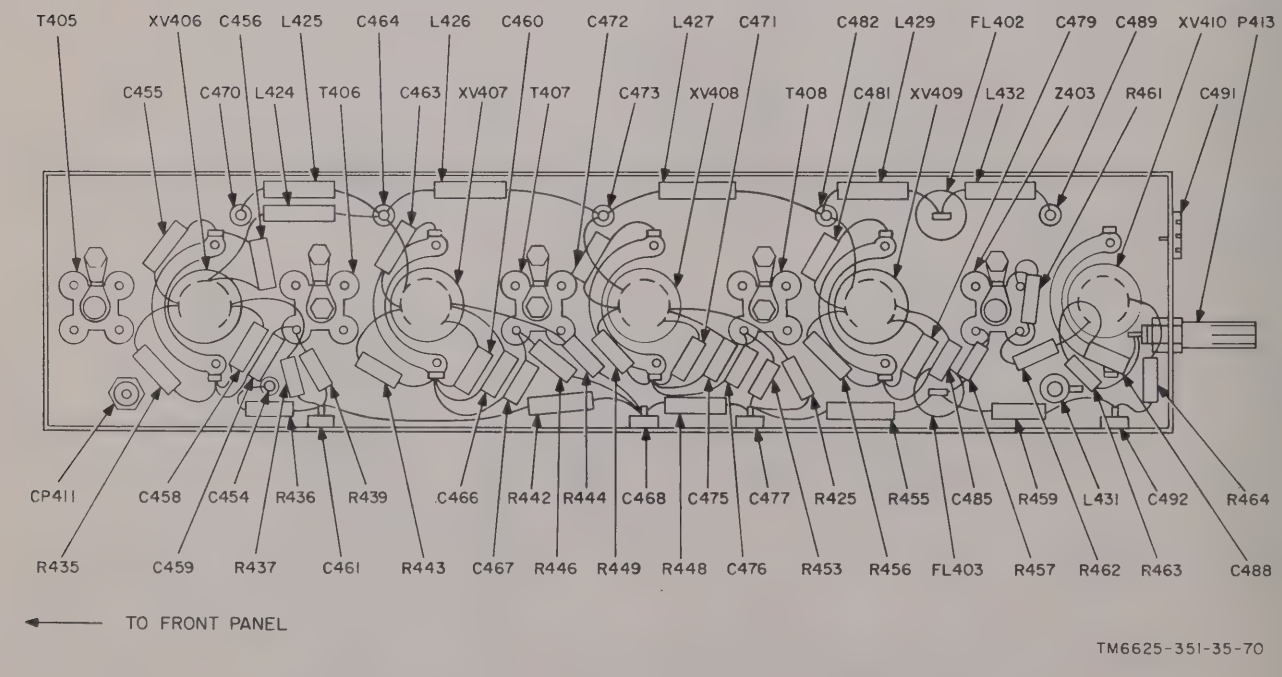

Figure 71. Tuning unit 3, if. amplifier, parts location diagram.

(6) *Tuning unit 4.*

Step	Symptom	Probable trouble	Correction
1	Tuning unit 4 interconnected through test harness to main unit; POWER switch at ON; IMPULSE GENERATOR DB above 1 μV/MC switch at ON; impulse generator output controls fully clockwise; but no meter indication at either position of FREQUENCY RANGE-MC switch.	Defective connection at terminal A2 on connector P501 (fig. 72).	Same as for step 1, tuning unit 1.
		Poor or no connection between subminiature connector plug P515, at harness end of wires running from receptacle P501, to connector J2 on detector and electrometer assembly A501.	Same as for step 1, tuning unit 1.
		Poor or no connection between protruding coaxial connector plug P514, on if. amplifier subassembly (fig. 76), and coaxial connector jack J1, on detector and electrometer assembly A501 (fig. 72).	Same as for step 1, tuning unit 1.
		Poor or no connection between connector plug P502, which terminates coaxial cable from terminal A2 on P501 (rear of chassis), and mating jack J501 or right-angle adapter CP504 (fig. 72).	Check P502 and J201 for secure mechanical and electrical connection.
		Poor or no connection between connector plug P503 of right-angle adapter CP504 and input jack J502 of coaxial switch S501.	Check P503 and J502 for secure mechanical and electrical connection. If this does not remedy trouble, check inner conductor of CP504 for continuity from J501 to P503. Also check for infinite resistance between inner conductor of CP504 and outer shell. Replace if defective.
		No driving power from rf tuner to 42-mc if. preamplifier (fig. 75).	Check for secure connections of coaxial cables terminating in plugs P507 and P509. Be sure that connector plug P507 securely mates if. preamplifier jack J507; and that plug P509 securely mates if. preamplifier input jack J509; if this does not remedy trouble, suspect other faulty cable connections.
		No driving power from if. preamplifier to if. step attenuator AT501 (fig. 72).	Check for secure connections of cable assembly W502. Be sure that connector plug P511 mates if. preamplifier output jack J511 (fig. 75), and that plug P512 mates if. step attenuator jack AT501J1 (fig. 72). If this does not remedy trouble, disconnect cable assembly W502 and check inner conductor of cable assembly W502 for continuity between P511 and P512. Also check for infinite resistance between inner conductor and outer shell. Repair or replace cable assembly W502 if defective.
		No driving power from if. step attenuator AT501 (fig. 72) to if. preamplifier (fig. 76).	Check for secure connection of connector plug P513 to mating jack AT501J2 on if. step attenuator (fig. 72). Opposite end of this coaxial cable is soldered to termination CP503 at input to if. amplifier (fig. 76). Check and

Step	Symptom	Probable trouble	Correction
			repair solder connection if open circuit is suspected. If this does not remedy trouble, suspect if. preamplifier and/or if. amplifier.
		Faulty if. preamplifier circuit (fig. 75).	Troubleshoot by signal substitution technique (para 74). Check V505, V506, and V507 (fig. 72).
		Faulty if. amplifier circuit (fig. 76).	Troubleshoot by signal substitution technique (para 74). Check V508 through V512 (fig. 72).
		Inoperative rf tuner (fig. 73-74).	Check each rf tuner as outlined in steps 2 and 3 below.
2	Meter indications are present in 700-1,000-mc position of FREQUENCY RANGE-MC switch, but cannot be obtained in 400-700-mc position.	Poor or no connection between output jack J504 of coaxial switch S501 and mating plug P504 of cable assembly W503.	Check J504 and P504 for secure mechanical and electrical connection.
		Poor or no connection between jack J508 on 400-700-mc rf tuner (fig. 73) and mating plug P508 of coaxial cable assembly W503.	Check J508 and P508 for secure mechanical and electrical connection. If this does not remedy trouble, suspect defect within coaxial switch S501 (fig. 72).
		Defective V503 or V504 (A, fig. 73).	Replace V503 or V504.
		Faulty contacts in coaxial switch S501 (fig. 72).	Remove operating power and disconnect plug P503 from input jack J502 on coaxial switch. Also disconnect P504 from output jack J504 on coaxial switch. Use ohmmeter to check for continuity from coaxial switch jack J502 through jack J504. Zero resistance eliminates S501 as source of trouble. Infinite resistance indicates defective coaxial switch. Replace defective component.
		Lack of 6.3-volt ac power source in 400-700 mc rf tuner.	Check for 6.3-volt ac source of heater power at protruding terminal of feedthru capacitor CP528 (fig. 73). If no voltage is present, check for 6.3-volt ac from each terminal of L525 to chassis ground. If this does not remedy trouble, disconnect operating power and check rf coil L525 for open circuit. Replace L525 if defective. Check wire lead from terminal 16 of P501 (fig. 72) to input terminal of L545 for continuity. Repair or replace wire lead if open circuit is indicated.
		Lack of 105-volt power source to plate circuit of oscillator V504.	Check for +105-volt source of power to oscillator V504 from protruding terminal of feedthru capacitor C527 (fig. 73) to chassis ground. If no voltage is indicated, check rf choke L519 for open circuit. If necessary, repair wire lead connection from wiper of switch (front) to terminal 3 of connector P501 (fig. 72).
		Lack of +150-volt power source to plate circuit of rf amplifier V503.	Check for B+ voltage to rf amplifier V503 by measuring voltage from protruding terminal of feedthru capacitor C521 (fig. 73) to chassis ground. Proper voltage will be

Step	Symptom	Probable trouble	Correction
			somewhat less than 150 volts, depending on setting of V503 ADJ control R508 (fig. 72). No voltage at C521 indicates defect in variable resistor R508, rf choke L521, and/or in wire lead which is soldered to P501, terminal 2. Replace defective component and/or repair lead connection.
		Lack of heater power at pin 4 of oscillator tube V504.	Replace L516 (fig. 73).
		Lack of plate potential at pins 1 and 7 of oscillator V504 (fig. 50).	With power removed, check rf choke L518, feedthru capacitor C526, and/or fixed resistor R511 (A, fig. 73). Replace defective part.
		Lack of 6.3-volt heater power at protruding heater terminal of rf amplifier V503 (fig. 50).	Check bypass capacitor C518, feedthru capacitor C517, and rf choke L512 (A, fig. 73). Replace defective part.
		Lack of anode potential at rf amplifier V503 (fig. 50).	Check R507 (B, fig. 73) and replace if necessary.
		Defective crystal mixer CR502 (A, fig. 73).	Replace with crystal diode known to be in satisfactory operating condition.
3	Meter indications are present at 400-700-mc of FREQUENCY RANGE-MC switch, but cannot be obtained at 700-1,000 mc.	Poor or no connection between output jack J503 of coaxial switch S501 and mating plug P505 of cable assembly W502 (fig. 72).	Check J503 and P505 for secure mechanical and electrical connection.
		Poor or no connection between J506 on 700-1,000-mc rf tuner (fig. 72) and mating plug P506 of coaxial cable assembly W502.	Check J506 and P506 for secure mechanical and electrical connection. If this does not remedy trouble, suspect defect within coaxial switch S501.
		Faulty contacts in coaxial switch S501 (fig. 72).	Remove operating power and disconnect plug P503 from input jack J502 on coaxial switch. Also disconnect P505 from output jack J503 on coaxial switch. Use ohmmeter to check for continuity from coaxial switch jack J502 to jack J503.
		Defective V501 or V502 (A, fig. 74).	Replace V501 or V502.
			Zero resistance eliminates S501 as source of trouble. Infinite resistance indicates defective coaxial switch. Replace defective component.
		Lack of 6.3-volt ac power source in 700-1,000-mc rf tuner (fig. 34 and 74).	Check for 6.3-volt ac source of heater power at protruding terminal of feedthru capacitor C540 (fig. 74). If no voltage is present, check for 6.3-volt ac from each terminal of L524 to chassis ground. If this does not remedy trouble, search for open wire lead connection between one terminal of rf choke L524 and junction of rf choke L545 (fig. 72) with bypass capacitor C531. Repair wiring.
		Lack of +105-volt power source to plate circuit of oscillator V502 (fig. 34 and 74).	Check for +105-volt source of power to oscillator V502 from protruding terminal of feedthru capacitor C511 to ground. If no

Step	Symptom	Probable trouble	Correction
			voltage is indicated, check rf choke L522 for open circuit. If this does not remedy trouble, suspect defective contacts 1 and wiper (W) on front section of switch S502 (fig. 72). Repair or replace defective switch.
		Lack of +150-volt power source to plate circuit of rf amplifier V501 (fig. 34 and 74).	Check for B+ voltage to rf amplifier V501 by measuring voltage from protruding terminal of feedthru capacitor C505 (fig. 74) to chassis ground. Proper voltage will be somewhat less than 150 volts, depending on setting of V501 ADJ control R503 (fig. 72). No voltage at C505 indicates defective variable resistor R503, rf choke L504, and/or a defect in wire lead which is soldered to high-potential terminal of V503 ADJ control R508 (fig. 72). Replace defective component and/or repair wire lead connection.
		Lack of heater power at pin 1 of oscillator tube V502 (fig. 50).	Check rf choke L506 (A, fig. 74) which is tied between tube clip at rear of V502 cavity and feedthru capacitor C512. In unsoldering or soldering L506 from tube clip, use pair of pliers on resistor axial lead as heat sink to avoid damage to acorn-type electron tube V502. Unsolder and resolder quickly; keep pliers on axial lead for approximately 1 minute after removing soldering iron, to dissipate heat.
		Lack of plate potential at pin 4 of oscillator V502 (fig. 50).	With power removed, check rf choke L508, feedthru capacitor C509 and/or resistor R505 (A, fig. 74). Replace defective part.
		Lack of 6.3-volt heater power at protruding heater terminal (fig. 50) of rf amplifier V501.	Check bypass capacitor C514, feedthru capacitor C502, and rf choke L502. Replace defective part.
		Lack of anode potential at rf amplifier V501 (fig. 50).	Check R502 and capacitor C503 (A, fig. 74). Replace defective part.
		Defective crystal mixer CR501 (A, fig. 74).	Replace with crystal diode known to be in satisfactory operating condition.
4	Meter indications are present when SIGNAL ATTENUATOR DB switch is rotated to 0 SUBST. ONLY, but pointer cannot be zeroed at 20, 40, 60, and 80, even with GAIN control set fully clockwise.	Defective relay K2 or resistors R1 through R5 in if. step attenuator AT501 (fig. 66).	Same as for tuning unit 2, step 2. If. step attenuators are identical and interchangeable in tuning units 2, 3, and 4. With operating power removed, check precision resistors R1 through R5 (±1% tolerance) for values indicated on schematic diagram (fig. 25). Replace defective components.
5	Meter indications are present when SIGNAL ATTENUATOR DB switch is rotated to 0 SUBST. ONLY and to 20, but pointer cannot be zeroed at 40, 60, and 80.	Defective relay K1 in if. step attenuator AT501 (fig. 66).	With SIGNAL ATTENUATOR DB switch at 40, 60, or 80, check for -150-volt energizing potential from protruding terminal of feedthru capacitor C1 to chassis ground. If no voltage is present, relay K1 will be inoperative.

Step	Symptom	Probable trouble	Correction
			Check continuity of wire lead from C1 to terminal 14 of connector P501 (fig. 72). Repair connections, if necessary. Check for continuity from feedthru capacitor C1 to chassis ground. If infinite resistance is indicated, suspect R6 and/or coil of relay K1 for open circuit. Replace defective component.
6	Meter pointer deflects to left of 0 DECIBELS in both positions of FREQUENCY RANGE-MC band switch.	Defective detector and electrometer assembly A501 (fig. 72).	Replace defective detector and electrometer sealed assembly with one known to be operating satisfactorily in another tuning unit. If this replacement remedies trouble, reinstall good detector and electrometer assembly in original tuning unit. Install new A501 assembly in tuning unit 4.
7	Monitor output signal by plugging headset, through headset cord, into PHONES jack. Intermittent scratchy sound is heard while scanning throughout either 400-700-mc or 700-1,000-mc band.	Dirt or other foreign matter has lodged itself between rotor and stator plates of TUNING capacitor in rf tuner (fig. 73-74).	***Warning:*** **Cleaning compound is flammable and its fumes are toxic. Do not use it near a flame; provide adequate ventilation.** Flush or clean segments of variable capacitor C520 (for 400-700-mc tuner) or C510 (for 700-1,000-mc tuner). Use cleaning compound.
8	Same as sympton 7 above -------	Shorting between certain segments of bent rotor plates and fixed stator plates of TUNING capacitor.	Refer to alignment procedure (para 97 and 98) and use proper alignment tool to bend rotor segment which makes contact with stator plate. Be careful when making this adjustment and check rf output over band to be sure that alignment is satisfactory.
9	Onscale meter indications are present, but full-scale pointer deflection cannot be obtained throughout each band, even with GAIN control rotated fully clockwise while rotating TUNING control throughout each frequency range.	Defective crystal mixer CR501 or CR502 (fig. 73 and 74). Defective or marginal electron tube V501 (for 700-1,000-mc tuner) or V503 (for 400-700-mc tuner).	Replace mixer with another crystal diode known to be in satisfactory operating condition. If this does not remedy trouble, suspect rf amplifier tube V501 or V503, depending on band in use. Replace tube with another coplanar triode known to be in satisfactory operating condition. (See fig. 49 for identification of V501 and V503 electrodes.)

This page left blank intentionally.

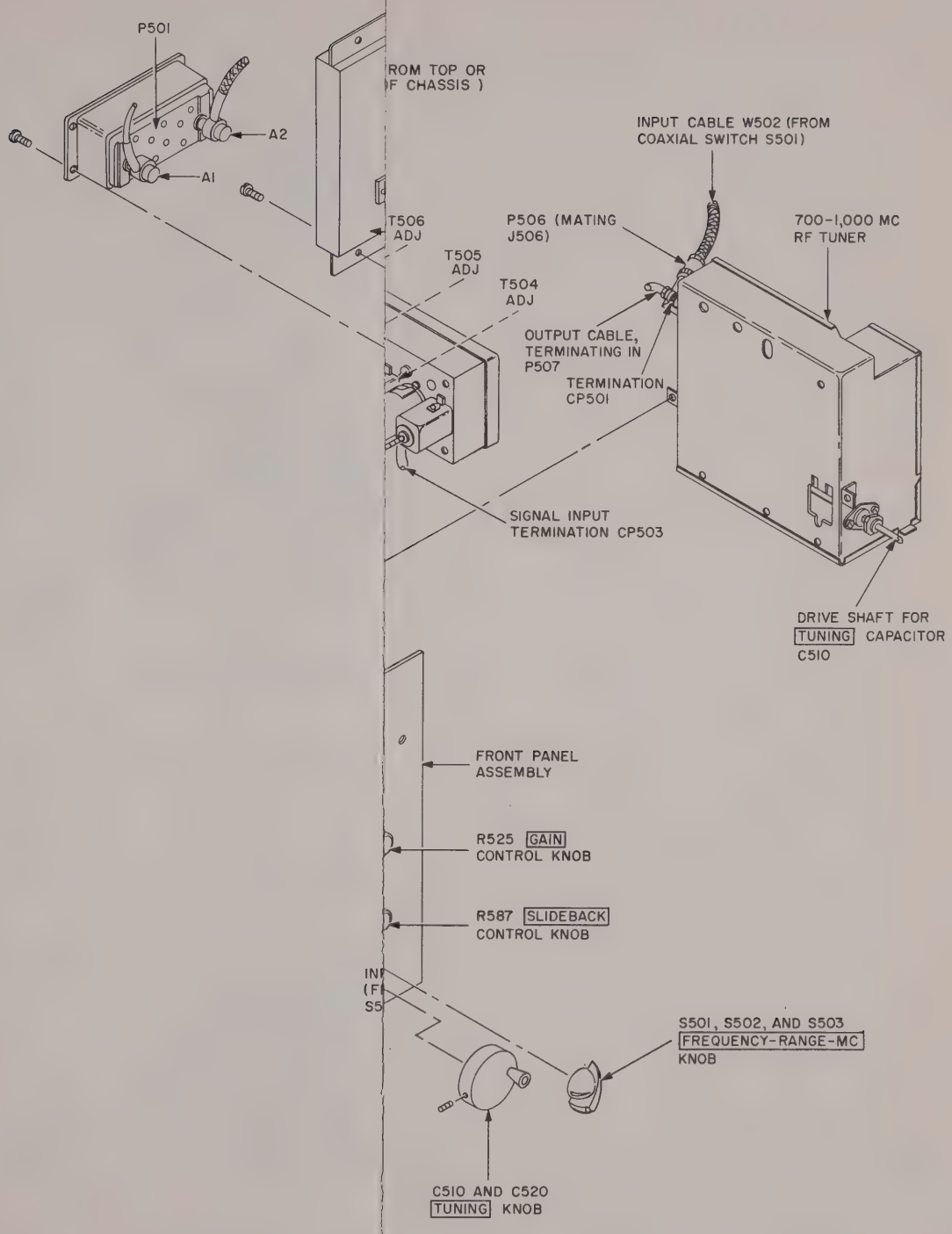

TM6625-351-35-71

This page left blank intentionally.

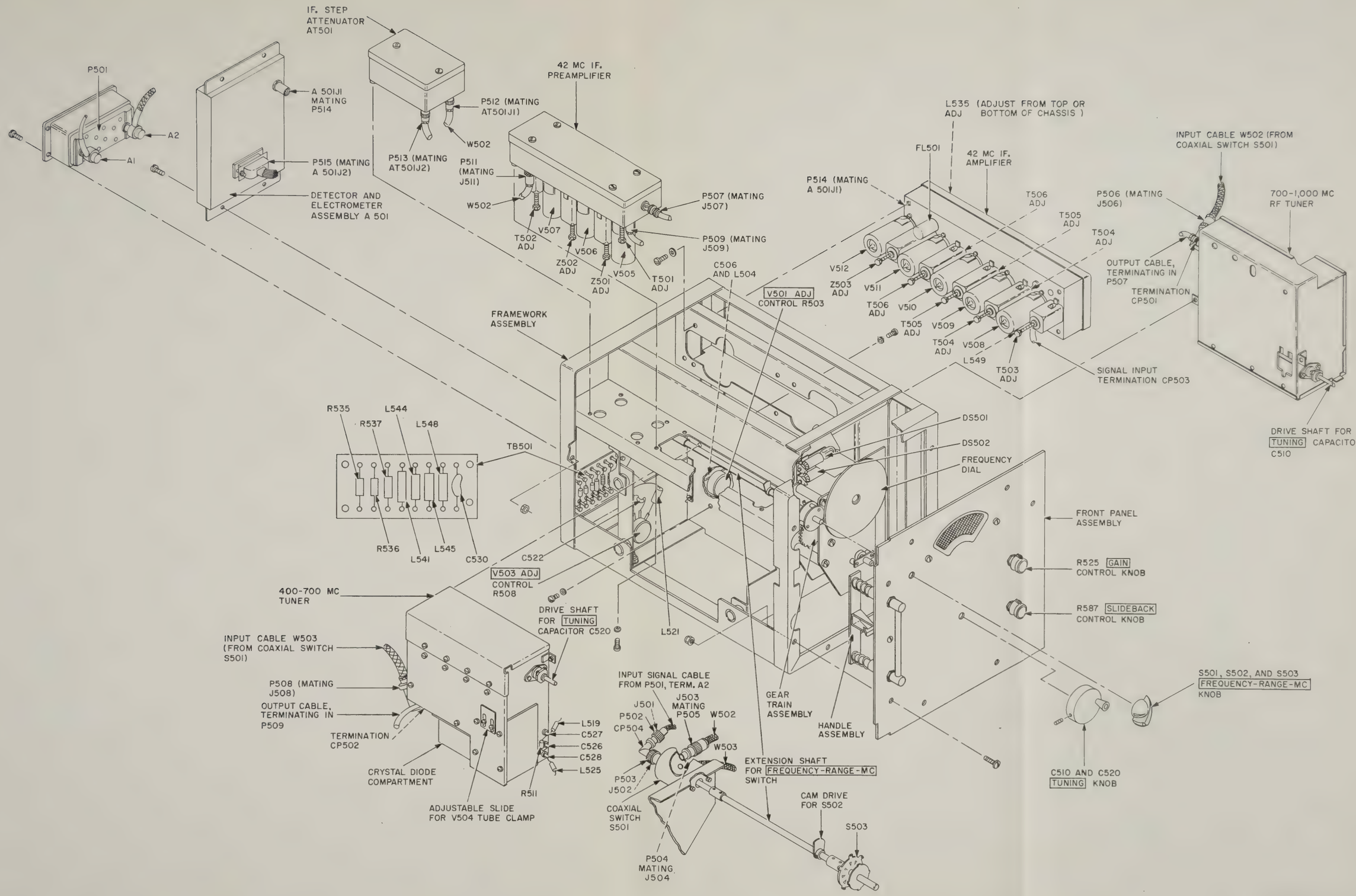

Figure 72. Tuning unit 4, parts location diagram.

TM6625-351-35-71

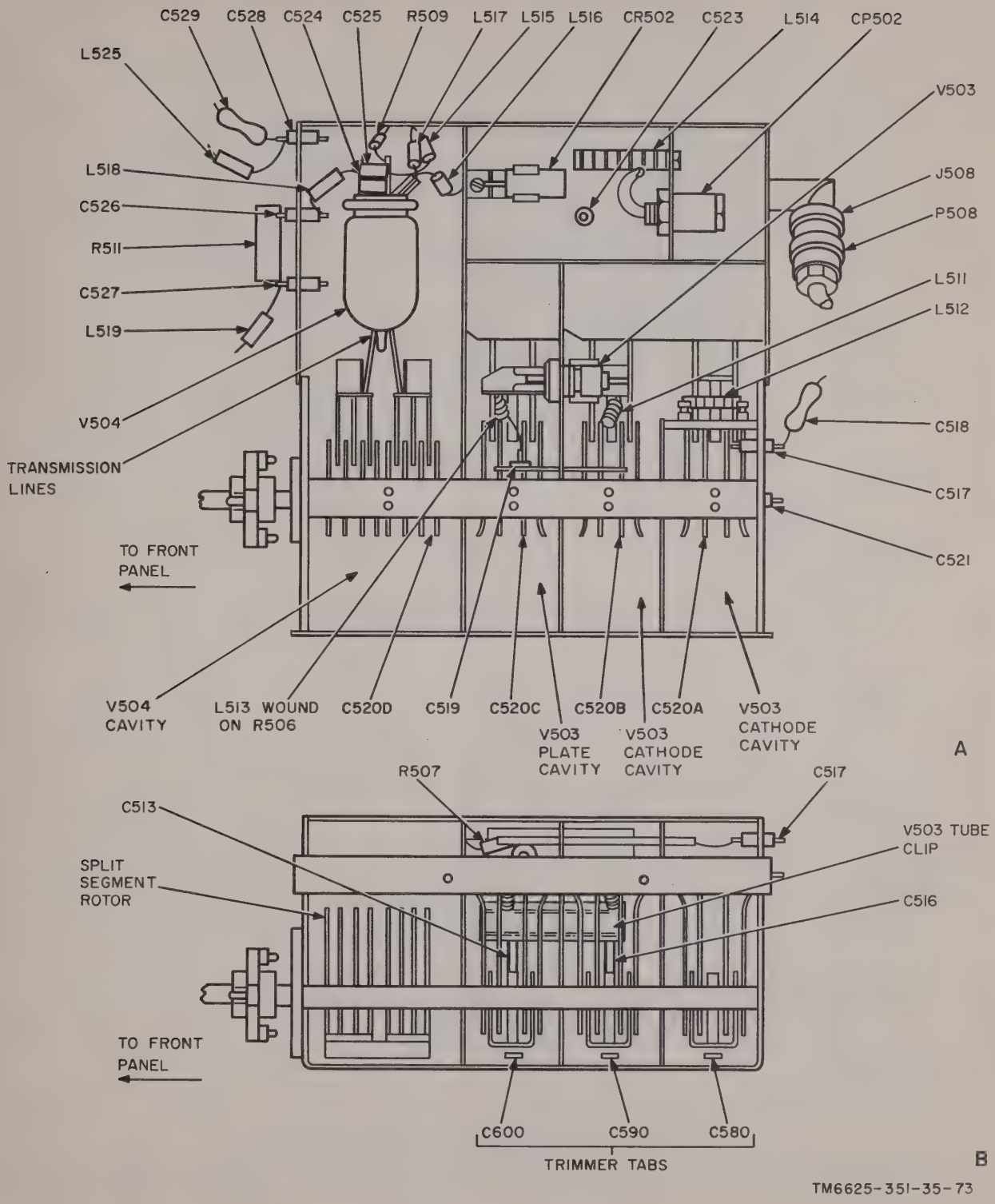

Figure 73. Tuning unit 4, rf tuner (400 to 700 mc), parts location diagram.

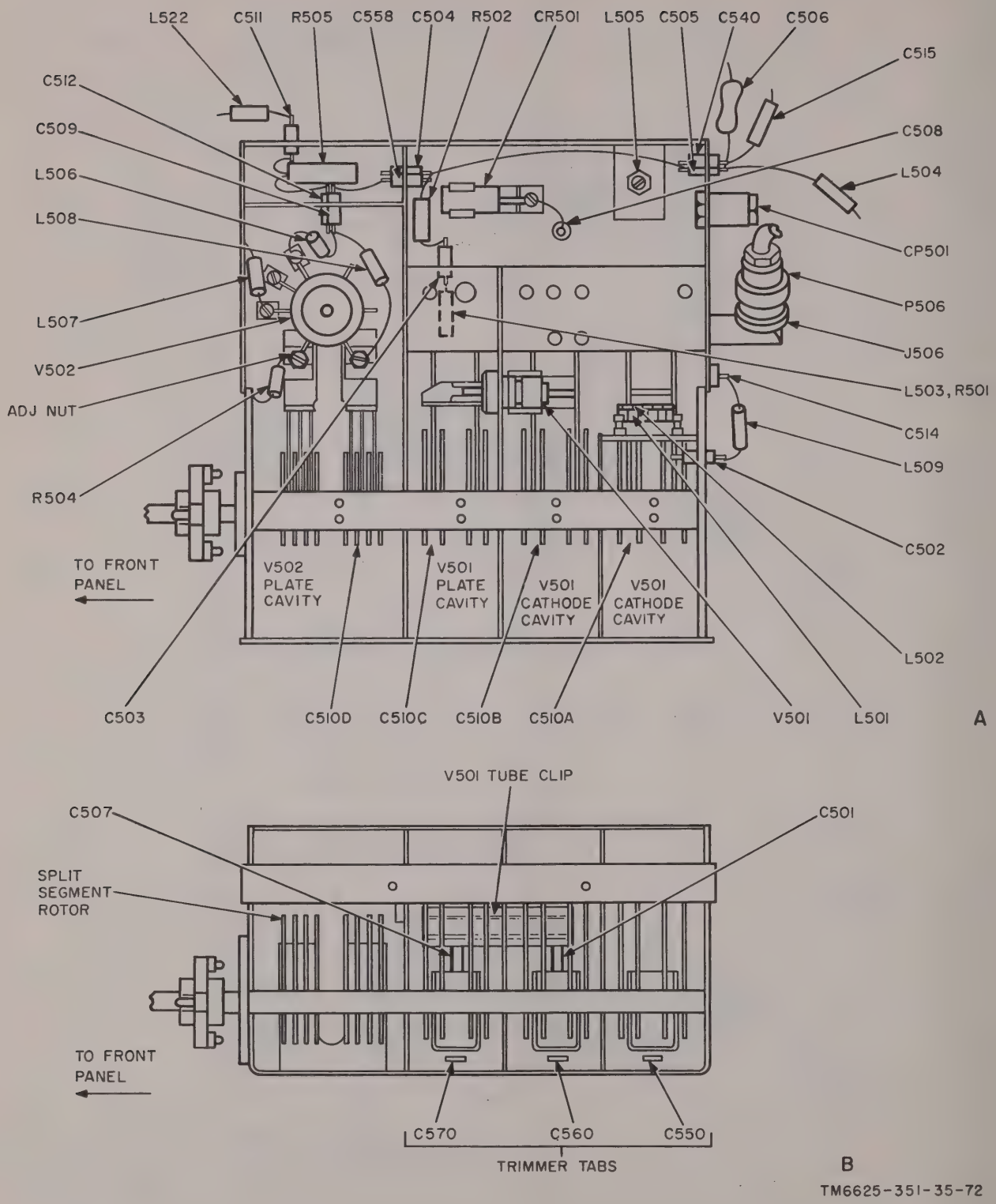

Figure 74. Tuning unit 4, rf tuner (700 to 1,000 mc), parts location diagram.

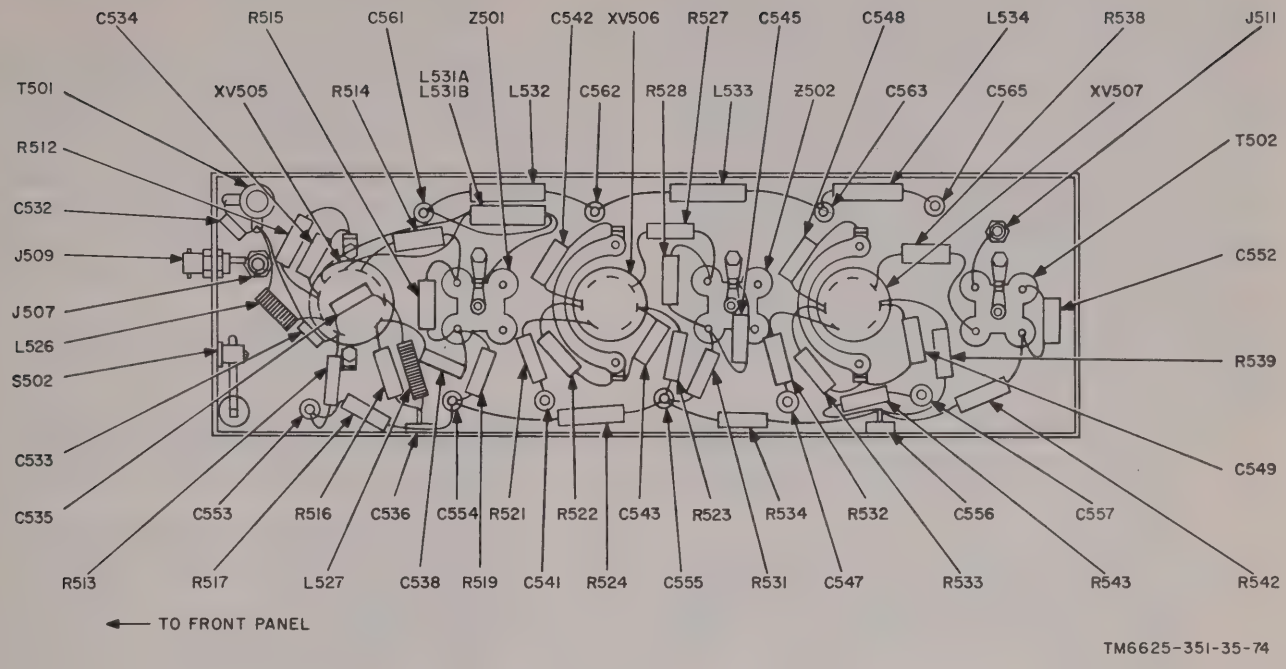

Figure 75. Tuning unit 4, if. preamplifier, parts location diagram.

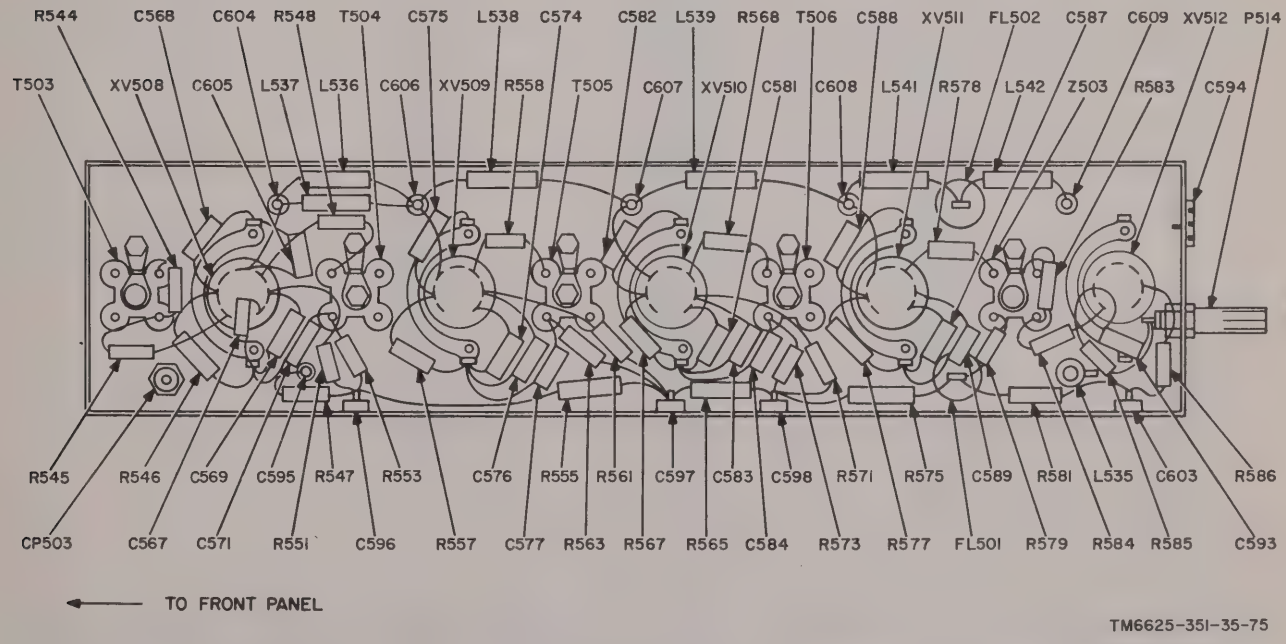

Figure 76. Tuning unit 4, if. amplifier, parts location diagram.

68. Dc Resistances of Tuning Unit Multipin Connectors

a. General. A convenient set of test points for resistance measurements is accessible at the rear of each tuning unit (fig. 56, 64, 68, and 72). With the tuning unit removed from the tuning unit compartment of the main unit, the multipin connector permits a check-out of 20 circuit points. Make measurements from each terminal of the connector to tuning chassis ground. In addition to the gneral conditions of measurement shown in the chart below, set the band switch on the applicable tuning unit as follows:

(1) For tuning unit 1, take measurements with MEGACYCLES band switch S1 at the .15- .36 (band 1) position.

(2) For tuning unit 2, take measurements with FREQUENCY RANGE-MC switch S201 at the 20-70-mc position.

(3) For tuning unit 4, take measurements with FREQUENCY RANGE-MC switch S503 at the 400-700-mc position.

Note: For tuning unit 3, take measurements at any frequency dial indication.

b. Chart of Resistance Measurements. The chart below lists the resistance measurements at multipin connectors at the rear of the tuning units under the following conditions:

(1) The tuning unit removed from main unit.

(2) The test harness disconnected from receptacle at rear of tuning unit.

(3) The GAIN and SLIDEBACK controls in extreme counterclockwise position.

(4) All measurements taken from designated terminal to tuning unit chassis ground.

(5) The mating pin numbers for tuning units 1 through 4 indicated on P1.

Terminal	Resistance (ohms)			
	P1 (fig. 56) (Tuning unit 1)	P201 (fig. 64) (Tuning unit 2)	P401 (fig. 68) (Tuning unit 3)	P501 (fig. 72) (Tuning unit 4)
A1	Infinity	Infinity	Infinity	Infinity
A2	0.8	0	0	0
1	38K	55K	50K	50K
2	6K	Infinity	Infinity	Infinity
3	Infinity	Infinity	Infinity	Infinity
4	0	0	0	0
5	Infinity	Infinity	Infinity	Infinity
6	Infinity	Infinity	Infinity	Infinity
7	Infinity	Infinity	Infinity	Infinity
8	Infinity	Infinity	Infinity	Infinity
9	Infinity	Infinity	Infinity	Infinity
10	Infinity	Infinity	Infinity	Infinity
11	Infinity	Infinity	Infinity	Infinity
12	Infinity	Infinity	Infinity	Infinity
13	0	0	0	0
14	30K	30K	30K	30K
15	30K	30K	30K	30K
16	1.8	0.8	0.8	0.8
17	0.8	1.6	0.8	0.8
18	320	320	310	320

69. Dc Resistances of Transformers and Coils

a. General. The dc resistance of transformer windings and coils is listed in c below.

b. Key to Identifying Terminals on If. Transformers (fig. 77). The if. transformers mounted in the various if. preamplifier and if. amplifier subassemblies do not have terminal numbers stamped on the phenolic wafer at the bottom of the shield can. Therefore, reference must be made to figure 77 for identifying which terminals are for the primary winding and

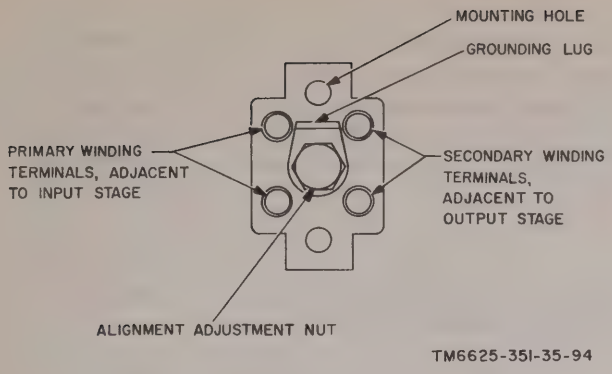

Figure 77. If. transformers (bottom view), key to terminal identification.

which are for the secondary winding of the transformer. Each transformer is mounted so that the primary winding terminals are always adjacent to the electron tube stage that supplies the input power. The grounded lead of the primary winding is always adjacent to the grounding lug at the center of the phenolic wafer. Likewise, the secondary winding terminals are always adjacent to the electron tube stage that receives the output power from the transformer. Again, the grounded lead of the secondary winding is always adjacent to the grounding lug.

c. Chart of Resistance Measurements for Dc Resistances of Transformers and Coils. The dc resistance of the transformer windings and the coils is as follows:

Unit	Transformer or coil	Terminals	Ohms
Main unit	L701 through L718	1-2 (across coil)	Less than 1
	L719	1-2	23
	L720	1-2	23
	L721	1-2	23
	L722	1-2	110
	T701	1-2	20,000
		2-4	600
	T702	1-2	2.2
		3-4	80
		4-5	80
		6-7	540
		8-9	2.4
		9-10	2.4
		11-12	2.4
		12-13	2.4
		14-16	Less than 1
		17-18	Less than 1
		18-19	Not used
Tuning unit 1	L1	1-2 (across coil)	1
	L2 through L9 and L11	1-2	Less than 1
	T1	Measured separately across primary terminals; then across secondary terminals.	Less than 1
	T2		Less than 1
	T4 through T9		Less than 1
	T11 through T19		Less than 1
	T21		Less than 1
	T22		Less than 1
	T23		Less than 1
	T24		Less than 1
	T25, T26, T27	Primary	2.4
		Secondary	2.5
	T28	Same as T1	4.4
	T29		Less than 1
	T31, T32, T33	Primary	9.6
		Secondary	9.7
	T34	Primary	10.5
		Secondary	10.6
Tuning unit 2	L202 through L206	1-2 (across coil)	Less than 1
	L208 through L209	1-2	Less than 1
	L211 through L215	1-2	Less than 1
	L223 through L226	1-2	Less than 1
	L229, L231 through L237	1-2	Less than 1
	T201 through T207	Measured separately across primary	Less than 1

Unit	Transformer or coil	Terminals	Ohms
	Z201 and Z202 ----------	terminals; then across secondary terminals.	Less than 1
Tuning unit 3	L403, L406, L407, L408, L411, L412, L413, L414, L415, L416, L417, L418, L419, L421 through L427, L429, L431, L432, L433.	1-2 (across coil) ----------	Less than 1
	T401 through T408, Z401, Z402, Z403.	Measured separately across primary terminals; then across secondary terminals.	Less than 1
Tuning unit 4	L501 through L509---------- L511 through L519 L521 and L522 L524 through L527 L531 through L535 L537 through L539 L541, L542, L544, L545, L546 L547 through L550	1-2 (across coil) ----------	Less than 1
	T501 through T506, Z501, Z502, Z503.	Measured separately across primary terminals; then across secondary terminals.	Less than 1

70. Signal Substitution Technique

a. General. Signal substitution requires a source of if. and rf signals. In addition, the headset supplied with the test set is used to monitor the signals. A multimeter, a tube tester, and a crystal diode tester are needed to isolate the defective part after the faulty stage has been indicated by signal substitution. The equipment listed in paragraph 65 is suitable for this purpose. In the tests indicated, ground one side of the signal generator output to the receiver chassis and connect the other side to the receiver point as directed. When working back from the output to the input stages, decrease the output of the signal generator as necessary to maintain an onscale meter indication. If possible, compare the signal output with that of a test set known to be in good condition. Misalignment of one or more stages of the receiver will cause reduced output. Misalignment of the local oscillator may prevent the tuner from developing the heterodyned signal. When the trouble is localized to a stage, first test the tube or crystal diode and then measure the voltages; finally, measure the resistance at the tube socket terminals. Disconnect a suspected leaky capacitor and replace it with one of equal value. Trouble in a circuit or stage sometimes might not cause changes in voltage and resistance measurements at the tube socket. The instructions included in this paragraph are merely a guide and should suggest other procedures such as voltage and resitance measurements on individual parts.

b. Adapters and Connectors. Adapters and connectors may be necessary in order to connect the tuning unit signal generator to various jacks in the tuning units. Refer to paragraphs 81 and 82 for information on the adapters and connectors required.

c. Signal Substitution Charts. Directions for signal substitution for each tuning unit are contained in the charts within paragraphs 71 through 74. Each chart contains specific instructions for a particular section of the tuning unit, such as the if. amplifier, the if. step attenuator, the if. preamplifier (for tuning units 3 and 4 only), and the rf tuner section. If the items listed in the *Possible trouble* column are not at fault, make voltage and resistance measurements to locate the defective parts. Apply the signal that is indicated in the *Signal frequency* column. Monitor the final output by connecting the headset, through the headset cord, into the main unit front-panel PHONES jack. If an audio

note is not heard in the headset, trouble is indicated. Connect the tuning unit to the main unit through the test harness so that the test points will be accessible.

Note: As the test connection point is changed when working back from the final output to earlier input stages, reduce the level of the signal from the signal generator. Also, rotate the GAIN control counterclockwise from its original midposition setting so that the pointer on the main unit panel-mounted meter maintains an onscale indication. At some frequency points, it may be necessary to rotate the SIGNAL ATTENUATOR DB switch from its originally suggested setting of 20 (in the charts below) to higher attenuation factors of 40, 60, or 80 db. Higher steps of attenuation in the path of the output from the signal generator will have no effect on the signal substitution technique of troubleshooting as long as an onscale meter pointer deflection is maintained throughout the following procedures.

71. Signal Substitution, Tuning Unit 1

a. If. Chart. Use the tuning unit 1 signal generator (para 65), with 400-cps modulation. Allow tuning unit 1, the main unit, and the tuning unit 1 signal generator to warm up for at least 1/2 hour before starting the tests. Set the front-panel controls on the test set as follows:

Control	Setting
Function switch -------	CW AVERAGE.
SIGNAL ATTENUATOR DB switch.	20.
MEGACYCLES band switch.	Band 1 (0.15 -- 0.36) or band 3 (0.87 -- 2.1) mc.
Calibration switch -----	SERIES CAL & OPERATE.
IMPULSE GENERATOR DB ABOVE 1μV/MC switch.	OFF.
POWER switch ---------	ON.
GAIN control	Originally at midposition; then rotated counterclockwise as additional amplifiers are inserted in signal path.
VOLUME control --------	Set for comfortable level of audio signal from headset.

b. Check of 455-Kc and 1,600-Kc If. Amplifier. The 455-kc if. amplifier (fig. 62) is energized only when MEGACYCLES band switch S1 is rotated to band 1 (0.15 — 0.36) and band 3 (0.87 — 2.1). In addition, the heterodyned output of the rf tuner section is provided with a path of continuity through the if. input selector, the if. step attenuator, the 455-kc if. amplifier, and the if. output selector only when switch S1 is in bands 1 and 3. First check the 455-kc if. amplifier; then rotate the band switch to band 2, 4, 5, or 6. This action deenergizes the 455-kc if. amplifier, energizes the 1,600-kc if. amplifier (fig. 61), and provides a different signal path through the tuning unit for the output of mixer stage V2.

Signal frequency (kc)	Connection to	Possible trouble
455	Input jack J5 on if. output selector (fig. 63). Disconnect plug P6 (fig. 56) from mating jack J5 and inject signal from external signal generator.	Defective headset or headset cord, audio amplifier in main unit, detector and electrometer assembly A1, or if. output selector; or open circuit at terminals of multipin connector P1, P9 mating A1J2, or P7 mating A1J1. If above circuit points check out satisfactorily, trouble is localized to if. output selector. Isolate trouble as outlined in troubleshooting chart (para 67).
455	V11 fourth if. amplifier plate pin 5 --------- *Caution:* **Reconnect plug P6 to mating jack J5 on if. output selector *before* starting this test.**	Defective or misaligned T34 network or termination CP4; open C166, R86, or R87; or shorted C163 or C164.
455	V11 fourth if. amplifier grid, pin 1. --------	Defective V11; open R83, R84, or shorted C158 or C161.
455	V10 third if. amplifier plate, pin 5. --------	Defective or misaligned T33 network; open R82; or shorted C155.
455	V10 third if. amplifier grid, pin 1 ---------	Defective V10; open R77 or R78; or shorted C152, C154.
455	V9 third if. amplifier plate, pin 5 ---------	Defective or misaligned T32 network; open R76; or shorted C148.

Signal frequency (kc)	Connection to	Possible trouble
455	V9 second if. amplifier grid, pin 1	Defective V9; open R72 or R73; or shorted C145, C147.
455	V8 first if. amplifier plate, pin 5	Defective or misaligned T31 network; open R69, R71, R88, or R89, feedthru capacitor C142, or coupling capacitor C144; shorted C137, C139, or C143.
455	V8 first if. amplifier grid, pin 1.	Defective V8; open R65 or R66; shorted C130, C131, C135, or C136.
455	If. interstage transformer T29, terminal 4 (fig. 62).	Defective T29; open R42, R43, R44, R64, or C133; shorted C129, C133.
455	V2 mixer plate, pin 1	Defective if. input selector (fig. 59), cable assembly W1, or if. step attenuator AT1 (fig. 60); open connection between jack J3 and mating plug P4; shorted termination CP3 on 455-kc if. amplifier (fig. 62); or open R62 at input to interstage transformer T29.
1,600	Input jack J4 on if. output selector (fig. 63). Disconnect plug P5 from mating jack J4 and inject signal from external signal generator.	If 455-kc test at input jack J5 on if. output selector checked out satisfactorily, trouble is localized to if. output selector itself. Isolate trouble by referring to trouble-shooting chart (para 67) for tuning unit 1.
1,600	V7 fourth if. amplifier plate, pin 5 *Caution:* **Reconnect plug P5 to mating jack J4 on if. output selector** ***before*** **starting this test.**	Defective or misaligned T28 network or termination CP2; open or shorted B+ feedthru capacitor C90; open R25, shorted C124; or trouble in contact 2, 4, 5, or 6 (depending on band in use) and wiper (W) of MEGACYCLES band switch S1 (rear).
1,600	V7 fourth if. amplifier grid, pin 1	Defective V7; open R58 or R59; or shorted C119, C122.
1,600	V6 third if. amplifier grid, pin 5	Defective or misaligned T27 network; open R57; or shorted C117.
1,600	V6 third if. amplifier grid, pin 1	Defective V6; open R55 or R56; or shorted C113, C115.
1,600	V5 second if. amplifier plate, pin 5	Defective or misaligned T26 network; open R54; or shorted C111.
1,600	V5 second if. amplifier grid, pin 1	Defective V5; open R49, R52, or R53; or shorted C104, feedthru capacitor C105, or bypass capacitors C107 or C108.
1,600	V4 first if. amplifier plate, pin 5	Defective or misaligned T25 network; open R51; or shorted C99 or C101.
1,600	V4 first if. amplifier grid, pin 1	Defective V4; open R47 or R48; or shorted C96 or C97.
1,600	If. interstage transformer T24 at ungrounded terminal of primary winding.	Defective T24; open C93 or R46; open or shorted feedthru capacitor C91; shorted bypass capacitors C92 or C94.
1,600	V2 mixer plate, pin 1	If 455-kc test at mixer plate checked out satisfactorily, trouble is localized to relay K1 or interstage transformer within if. input selector (fig. 59); or to selector relay K5 within if. step attenuator AT1 (fig. 60); open connection between jack J2 on if. step attenuator and mating plug P3 (fig. 60); defective termination CP1 on 1,600-kc if. amplifier (fig. 61); or open R45 at input to interstage transformer T24.

c. Rf Chart (fig. 57 and 58). After completion of the tests listed in *b* above shows that the trouble is not in the if. output selector, the 455- or 1,600-kc if. amplifier, the if. step attenuator, or the if. input selector, proceed with the tests listed in the chart below. Use the tuning unit 1 signal generator (para 65) with 400-cps modulation. Check each of the six bands and each of the six turret tuner segments (fig. 58) by rotating the MEGACYCLES switch, position by position, to correspond with

the frequency output of the tuning unit 1 signal generator, as indicated in the chart below. After connecting the test signal to the signal injection grid of mixer V2 and to the plate and grid of rf amplifier V1, apply the test signal to main unit front-panel SIGNAL INPUT jack J705. Set up the tuning unit 1 signal generator and the test set as shown in figure 78.

Signal frequency	Connection to	Possible trouble
255 kc (center of band 1 frequency range)	V2 mixer, signal injection grid, pin 7 (fig. 47).	Defective mixer V2 or oscillator V3; defective oscillator tuned network consisting of C1, C2, C3, R1, and T1 on band 1 tuner segment Z1 (fig. 58); open C54, R12, R14, R15, R16, or R18; or shorted C52A, C62, C63, C64, or C65.
255 kc	V1 rf amplifier plate, pin 1 (fig. 47).	Defective tuned network consisting of C4, C5, C6, R2, and T2 on band 1 tuner segment Z1; open R9 or R11; or shorted C52B, C56, C57, or C61.
255 kc	V1 rf amplifier grid, pin 7 (fig. 47).	Open R10 or wavetrap coil L1, preventing current return to V1 cathode; or shorted C52C, C58, or C59.
255 kc	Front-panel SIGNAL INPUT jack J705 (fig. 78).	Poor or no connection at main unit right-angle adapters CP701 or CP705; defective main unit coaxial cable W701; defective signal attenuator AT702; open connection at coaxial plug P712 which mates right-angle adapter CP705; open solder connection at terminal A2 on main unit connector J701 or on tuning unit connector P1; defective input tuned network consisting of C8, C9, and T4 on band 1 tuner segment Z1; or defective connections between tuner segment protruding contacts and wiper contact bar (fig. 56).
Note: In following tests, rotate MEGACYCLES switch S1 to remaining five bands, one at a time, and set TUNING dial to same frequency as for signal generator. If tests at 255 kc (listed above) checked out satisfactorily, trouble is isolated to tuned networks mounted on applicable turret tuner segment (fig. 58).		
615 kc (center of band 2 frequency range)	V2 mixer, signal injection grid, pin 7 (fig. 47).	Defective oscillator tuned network consisting of C11, C12, C13, R3, and T5 on band 2 tuner segment Z2 (fig. 58).
615 kc	V1 rf amplifier plate, pin 1.	Defective amplifier plate coupling network consisting of C14, C15, C16, R8, and T6 on band 2 tuner segment Z2.
615 kc	Front-panel SIGNAL INPUT jack J705 (fig. 78).	Defective input tuned network consisting of C17, C18, and T7 on band 2 tuner segment Z2.
1.485 mc (center of band 3 frequency range)	V2 mixer, signal injection grid, pin 7 (fig. 47).	Defective oscillator tuned network consisting of C19, C20, C21, R4, and T8 on band 3 tuner segment Z3 (fig. 58).
1.485 mc	V1 amplifier plate, pin 1.	Defective amplifier plate coupling network consisting of C22, C23, C24, and T9 on band 3 tuner segment Z3.
1.485 mc	Front-panel SIGNAL INPUT jack J705 (fig. 78).	Defective input tuned network consisting of C25, C26, and T11 on band 3 tuner segment Z3; or trouble between contact number 8 on turret tuner segment and corresponding wiper 8 on rf tuner chassis (fig. 56). Lack of proper contact between these terminals may prevent test signal of approximately 1.6 mc (same frequency as for 1,600-kc if. amplifier) from heterodyning with oscillator V3.
3.65 mc (center of band 4 frequency range)	V2 mixer, signal injection grid, pin 7 (fig. 47).	Defective oscillator tuned network consisting of C27, C28, C29, R5, and T12 on band 4 tuner segment Z4 (fig. 58).
3.65 mc	V1 rf amplifier plate, pin 1.	Defective amplifier plate coupling network consisting of C31, C32, and T13 on band 4 tuner segment Z4.
3.65 mc	Front-panel SIGNAL INPUT jack J705 (fig. 78).	Defective input tuned network consisting of C33, C34, and T14 on band 4 tuner segment Z4.
8.95 mc (center of band 5 frequency range)	V2 mixer, signal injection grid, pin 7 (fig. 47).	Defective oscillator tuned network consisting of C35, C36, C37, R6, and T15 on band 5 tuner segment Z5 (fig. 58).
8.95 mc	V1 rf amplifier plate, pin 1.	Defective amplifier plate coupling network consisting of C38, C39, C40, and T16 on band 5 tuner segment Z5.

Signal frequency	Connection to	Possible trouble
8.95 mc	Front-panel SIGNAL INPUT jack J705 (fig. 78).	Defective input tuned network consisting of C41, C42, and T17 on band 5 tuner segment Z5.
21.35 mc (center of band 6 frequency range)	V2 mixer, signal injection grid, pin 7.	Defective oscillator tuned network consisting of C43, C44, C45, R7, and T18 on band 6 tuner segment Z6 (fig. 58).
21.35 mc	V1 rf amplifier plate, pin 1.	Defective amplifier plate coupling network consisting of C46, C47, C48, and T19 on band 6 tuner segment Z6.
21.35 mc	Front-panel SIGNAL INPUT jack J705.	Defective input tuned network consisting of C49, C51, and T21 on band 6 tuner segment Z6.

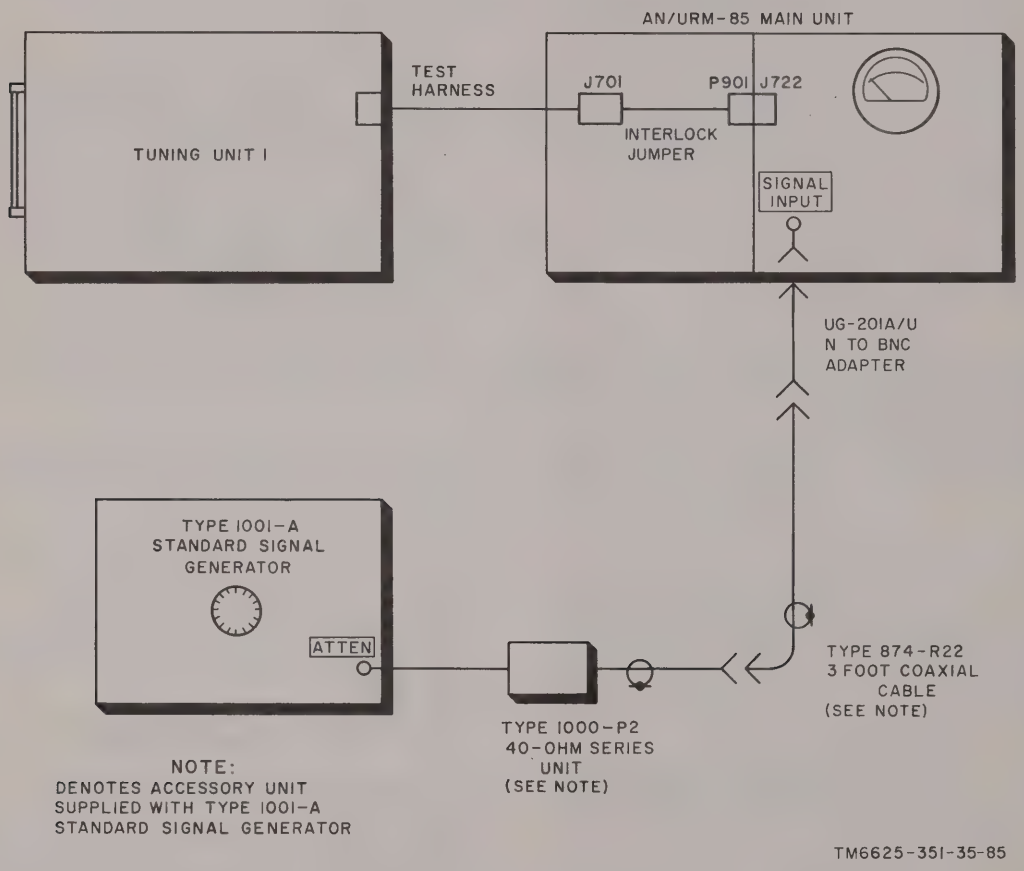

Figure 78. Test setup for tuning unit 1, rf tuner section.

72. Signal Substitution, Tuning Unit 2

a. If. Chart (fig. 67). Use tuning unit 2 signal generator (para 65) with 400-cps modulation. Allow tuning unit 2, the main unit, and tuning unit 2 signal generator to warm up for at least 1/2 hour before starting the tests. Set the front-panel controls on the test set as follows:

Control	Setting
Function switch	CW AVERAGE
SIGNAL ATTENUATOR DB switch	20.
FREQUENCY RANGE-MC switch	Originally 20–70 mc; then 70–220 mc.
Calibration switch	SERIES CAL & OPERATE.

Control	Setting
IMPULSE GENERATOR DB ABOVE 1μV/MC ON-OFF switch.	OFF.
GAIN control	Originally midposition; then rotated counterclockwise as additional amplifiers are inserted in the signal path.
POWER ON-OFF switch	ON.
VOLUME control	Set for comfortable level of audio signal from headset.

b. If. Test Procedure.

Signal frequency (mc)	Connection to	Possible trouble
10.7	Junction of R271 and signal peaking coil L229 in V211 cathode circuit (fig. 67 and 64).	Defective headset, or headset cord, audio amplifier in main unit, detector and electrometer assembly A201, or open circuit at terminals of multipin connector P201; or defect in plug P213 mating A201J2.
10.7	V211 if. cathode follower grid, pin 1 (fig. 48 and 67).	Defective V211, or open R269, R271, R272, or L235, or shorted C293, C294, or C295.
10.7	V210 fourth if. amplifier plate, pin 5	Defective Z202 network, open R267 or filter FL201, or shorted C289.
10.7	V210 fourth if. amplifier grid, pin 1	Defective V210, open R265, or shorted C287 or C288.
10.7	V209 third if. amplifier plate, pin 5	Defective Z201 network, open R261 or R263, or shorted C283 or C286.
10.7	V209 third if. amplifier grid, pin 1	Defective V209, open R259 or shorted C282.
10.7	V208 second if. amplifier plate, pin 5	Defective T207, open R257 or R258, or shorted C277 or C279.
10.7	V208 second if. amplifier grid, pin 1	Defective V208, open R252, or R255, or shorted C271 or C276.
10.7	V207 first if. amplifier plate, pin 5	Defective T206, open R251 or R254, or shorted C269 or C273.
10.7	V207 first if. amplifier grid, pin 1	Defective V207, open R248, R241, or R239 GAIN control.
10.7	V203 mixer plate, pin 1 (fig. 65)	Defective T202, S201 (terminals Y1 and Y2), cable assembly W201, if. step attenuator AT201, termination CP201, or T205.

c. Rf Chart (fig. 65). After the tests listed in *b* above show that the trouble is not in the if. amplifier and if. step attenuator, proceed with the tests listed in the chart below. Use tuning unit 2 signal generator (para 65) with 400-cps modulation. First, check the 20- to 70-mc band with the FREQUENCY RANGE-MC switch at the 20-70 mc position; then check the 70- to 220-mc band with the FREQUENCY RANGE-MC switch at the 70-220 mc position. In each case, tune the frequency dial on tuning unit 2 to the frequency of tuning unit 2 signal generator.

Signal frequency (mc)	Connection to	Possible trouble
40	V203 mixer grid, pin 2, (fig. 48)	Oscillator V203 not operating, defective V203, open R213, or shorted C221.
40	V202 second rf amplifier plate, pin 5	Open L204, L201C, or R208, or shorted C217, C218, or C219.
40	V202 second rf amplifier grid. pin 1	Defective V202, open R206, R207, R211, or shorted C216, C238, C239, or C241.
40	V201 first rf amplifier plate, pin 5	Open L203, L201B, C212, or R205, or shorted C208, C209, or C211.
40	V201 first rf amplifier grid, pin 1	Defective V201, open R202, R203, R204, or shorted C232, C233, or C234.

Signal frequency (mc)	Connection to	Possible trouble
40	J201, on rf tuner chassis	Defective J201, S201 (contacts 1 and wiper), or T201, open R201, L201A, or L202, or shorted C202, C203, or C204.
150	V206 mixer grid, pin 2 (fig. 48)	Oscillator V206 not operating, defective T204, open R229, R231, or R236, or shorted C246, C247, or C252.
150	V205 second rf amplifier plate, pin 5	Open L207C, L212, L213, or C244, or shorted C242, or C243.
150	V205 second rf amplifier grid, pin 1	Defective V205, open R225, R226, or R227, or shorted C213A, C213B, or C213D.
150	V204 first rf amplifier plate, pin 5	Open L207B, L209, L211, C237, or R225, or shorted C235, or C236.
150	V204 first rf amplifier grid, pin 1	Defective V204, open R221, R222, or R223, or shorted C205A, C205B, or C205D.
150	J201, on rf tuner chassis	Defective contacts 2 and wiper on switch S201, or T203, open L207A or L208, or shorted C231.

73. Signal Substitution, Tuning Unit 3

a. If. Chart (fig. 70 and 71). Use tuning unit 3 signal generator (para 65) with 400-cps modulation. Allow tuning unit 3, the main unit, and tuning unit 3 signal generator to warm up for at least 1/2 hour before starting the tests. Set the front-panel controls on the test set as follows:

Control	Setting
Function switch	CW AVERAGE.
SIGNAL ATTENUATOR DB switch	20.
Calibration switch	SERIES CAL & OPERATE.
IMPULSE GENERATOR DB ABOVE 1μV/MC ON-OFF switch.	OFF.
GAIN control	Originally midposition; then rotated counterclockwise as additional amplifiers are inserted in the signal path.
POWER ON-OFF switch	ON.
VOLUME control	Set for comfortable level of audio signal from headset.

b. If. Test Procedure.

Signal frequency (mc)	Connection to	Possible trouble
42	Junction of L431 and R463 in V410 if. cathode follower circuit (fig. 71).	Defective headset or headset cord, audio amplifier in main unit, detector and electrometer assembly A401; or open circuit at terminals of multipin connector P401, or in plug P414, which mates J2 on detector and electrometer assembly or improper mating of protruding connector P413 on if. amplifier chassis with jack J1 on detector and electrometer assembly.
42	V410 if. cathode follower grid, pin 1	Defective V410, open B+ filter FL403, R459, R463, or R464, or shorted C488, C491, or C492.
42	V409 sixth if. amplifier plate, pin 5	Defective or misaligned Z403 network, open R457, R461, or R462, or shorted C485.
42	V409 sixth if. amplifier grid, pin 1	Defective V409, open R456, or shorted C479 or C481.
42	V408 fifth if. amplifier plate, pin 5	Defective or misaligned T408 network, open R453, or R455, or shorted C476 or C477.
42	V408 fifth if. amplifier grid, pin 1	Defective V408, open R449, or R451, or shorted C471, C472, or C475.

Signal frequency (mc)	Connection to	Possible trouble
42	V407 fourth if. amplifier plate, pin 5 -----	Defective or misaligned T407 network, open R446 or R448, or shorted C467 or C468.
42	V407 fourth if. amplifier grid, pin 1 -----	Defective V407, open R443 or R444, or shorted C460, C463, or C466.
42	V406 third if. amplifier plate, pin 5 ------	Defective or misaligned T406 network, open R439 or R442, or shorted C459 or C461.
42	V406 third if. amplifier grid, pin 1 ------	Defective V406, open R435 or R437, shorted feedthrough capacitor C454, or shorted bypass capacitors C455 and C458.
42	V405 second if. amplifier plate, pin 5 ----	Defective T404 (fig. 70) or misaligned T405 (fig. 71) network, open R432, R433, R436, or feedthrough capacitors C450 and C454; open or no connections between coaxial cable assembly W403 and jack J408 (on if. preamplifier) and jack J1 (on if. step attenuator); defective if. step attenuator (fig. 25); open or no connection between jack J2 on if. step attenuator and mating plug P412; or shorted or open termination CP411 at input to if. amplifier (fig. 68).
42	V405 second if. amplifier grid, pin 1 -----	Defective V405, open R427, or R429, or shorted capacitor C441, C442, or C443.
42	V404 first if. amplifier plate, pin 5 ------	Defective or misaligned Z402 network open R423, R425, R426, or R428, or bias network resistors R465 through R468, or shorted C437, C438, or C446.
42	V404 first if. amplifier grid, pin 1 -------	Defective V404, open R419 or R422, or shorted C434 or C435.
42	V403B cascode amplifier plate, pin 6 -----	Defective or misaligned network Z401, open R412, R415, R417, R418, of R421, or shorted C432, C433, or C447.
42	V403A cascode driver plate, pin 1 -------	Defective V403, open R411, R413, R414, or L418, shorted C425, C427, C428, or C480.
42	V403A cascode driver grid, pin 2 -------	Open R410, or shorted secondary winding of T401, C423, or C426.

c. Rf Chart (fig. 69). After the tests in *b* above show that the trouble is not in the if. amplifier, the if. step attenuator, and the if. preamplifier, proceed with the tests listed in the chart below. Use tuning unit 3 signal generator (para 65) with 400-cps modulation. Since tuning unit 3 does not use band switching, set tuning unit 3 signal generator and the TUNING dial of tuning unit 3 to 300 mc (the center of the frequency range). Refer to figure 69 and proceed as follows:

Signal frequency (mc)	Connection to	Possible trouble
300	V401 rf amplifier plate secured by tube clip directly above C404 frame (fig. 68 and 69).	V402 oscillator not operating; hexagonal nuts securing L404 loop not making secure contact to C404 frame; spacing between loops L404 and L405 improperly set (see alignment procedure); open C419, L415, or L416 (accessible with left access cover removed); shorted trimmers C405 and C408; or open circuit in coaxial cable assembly W402. *Note:* Check for secure mechanical and electrical connection between connector jack J406 (on exterior of rf tuner, fig. 69) with connector plug P407; also check for secure connection between connector jack J407 (on if. preamplifier, fig 70) with connector plug P408.
300	V401 rf amplifier cathode secured by tube clip directly above C402 frame (fig. 69).	Defective V401; open L406 or R401 (in V401 plate output circuit); open soldered connections to protruding terminal of feedthrough capacitor C409 (inserted in wall separating V401 cathode input circuit from plate output

Signal frequency (mc)	Connection to	Possible trouble
		circuit); open soldered connections to feed-through capacitor C410 (inserted in exterior right wall of tuner, fig. 69); open R402 (mounted on exterior right wall of tuner); open V401 ADJ control R405 (mounted on tuning unit framework assembly, fig. 68); or open R420 (mounted on TB401, fig. 68). Other possible troubles are shorted bypass capacitor C406 (fig. 69) (inserted in wall separating V401 cathode input circuit from plate output circuit), and defective crystal mixer CR401 (accessible with left access cover removed).
300	Main unit front-panel jack J705 ----------	Defective right-angle adapters CP401 and CP402, bandpass filter FL401, coaxial cable assembly (fig. 68), or no connection between connector plug P406 and mating jack J405 within rf tuner (fig. 69), or improper spacing between L401 and L402 loops (in V401 cathode input circuit, fig. 69); open L403, or shorted C403 (in series with trimmer C401 within V401 cathode input circuit, fig. 69).

74. Signal Substitution, Tuning Unit 4

a. If. Chart (fig. 75 and 76). Use tuning unit 4 signal generator (para 65) with 1,000-cps modulation. Allow tuning unit 4, the main unit, and tuning unit 4 signal generator to warm up for at least 1/2 hour before starting the tests. Set the front-panel controls on the test set as listed in the chart below.

Note: The signal generator for tuning unit 4 is provided with an internal modulating oscillator of 1,000 cps only. If an equivalent signal generator is used in the following tests, the modulating voltage should be at a frequency within the audio range, preferably 1,000 cps.

Control	Setting
Function switch ----------	CW AVERAGE.
SIGNAL ATTENUATOR DB switch ----------	20.
FREQUENCY RANGE-MC switch ----------	Originally set to 400–700 mc; after this test has been completed, set to 700–1000 mc.
Calibration switch ----------	SERIES CAL & OPERATE.
IMPULSE GENERATOR DB ABOVE 1μV/MC ON-OFF switch.	OFF.
GAIN control ----------	Originally midposition; then rotated counterclockwise as additional amplifiers are inserted in the signal path.
POWER ON-OFF switch ----------	ON.
VOLUME control ----------	Set for comfortable level of audio signal from headset.

b. If. Test Procedure.

Signal frequency (mc)	Connection to	Possible trouble
42	Junction of L535 and R585 in V512 if. cathode follower circuit (fig. 76).	Defective headset or headset cord, audio amplifier in main unit, detector and electrometer assembly A501, or open circuit at terminals of multipin connector P501, or in plug P515, which mates J2 on detector and electrometer assembly, or improper mating of protruding connector P514 on if. amplifier chassis with jack J1 on detector and electrometer assembly.

Signal frequency (mc)	Connection to	Possible trouble
42	V512 if. cathode follower grid, pin 1------	Defective V512, open B+ filter FL501, R581, or R586, or shorted C593, C594, or C603.
42	V511 sixth if. amplifier plate, pin 5 ------	Defective or misaligned Z503 network, open R578, R579, R583, R584, or R585, or shorted C589 or C593.
42	V511 sixth if. amplifier grid, pin 1 ------	Defective V511, open R577, or shorted C587 or C588.
42	V510 fifth if. amplifier plate, pin 5 ------	Defective or misaligned T506 network, open R573 or R575, or shorted C584 or C598.
42	V510 fifth if. amplifier grid, pin 1 -------	Defective V510 open R567 or R571, shorted C581, C582, or C583.
42	V509 fourth if. amplifier plate, pin 5 ----	Defective or misaligned T505 network, open R558, R563, or R565, or shorted C574, C575, or C576.
42	V509 fourth if. amplifier grid, pin 1 -----	Defective V509, open R557 or R561, or shorted C574, C575, or C576.
42	V508 third if. amplifier plate, pin 5 ----	Defective or misaligned T504 network, open R548, R553, or R555, or shorted C571 or C596.
42	V508 third if. amplifier grid, pin 1-------	Defective V508, open R546 or R551, shorted feedthrough capacitor C595, or shorted by-pass capacitors C567, C568, or C569.
42	V507 second if. amplifier plate, pin 5 (fig. 75).	Defective T502 (fig. 75) or T503 (fig. 76) network; open R538, R542, R543, L549, or R547; shorted C556 or open soldered connections at feedthrough capacitors C557 and C595; open or no connections between coaxial cable assembly W502 and jack J511 (on if. preamplifier) and jack J1 (on if. step attenuator); defective if. step attenuator; open or no connection between jack J2 on if. step attenuator and mating plug P513; or shorted or open termination CP503 at input to if. amplifier (fig. 72).
42	V507 second if. amplifier grid, pin 1 -----	Defective V507, open R533 or R539, or shorted C548 or C549.
42	V506 first if. amplifier plate, pin 5 ------	Defective or misaligned Z502 network, open R527, R528, R531, R532, R534, or bias network resistors R525, R526, R535, and R537; or shorted C545 or C555.
42	V506 first if. amplifier grid, pin 1 -------	Defective V506, open R522 or R523, or shorted C542 or C543.
42	V505 cascode amplifier plate, pin 6 ------	Defective or misaligned network Z501, open R514, R515, R519 or R524, or shorted C538 or C554.
42	V505 cascode driver plate, pin 1 --------	Defective V505, open R513, R516, R517, or L527, or shorted C533, C535, or C536.
42	V505 cascode driver grid, pin 2 --------	Open R512, or shorted secondary winding of T501, C532, or C534.

c. Rf Chart. When the tests in *b* above show that the trouble is not in the if. amplifier, the if. step attenuator, nor in the if. preamplifier, proceed with the tests listed in the chart below. Use tuning unit 4 signal generator (para 65) with 1,000-cps modulation. Since tuning unit 4 uses band switching, first rotate the band switch to 400-700 mc; then set tuning unit 4 signal generator and the TUNING dial of tuning unit 4 to 550 mc (the center of the low-band frequency range), and proceed as indicated in the chart below. After the tests of the low-band rf tuner have been checked out satisfactorily, rotate the band switch to 700-1,000 mc; then set tuning unit 4 signal generator and the TUNING dial of tuning unit 4 to 850 mc (the center of the high-band frequency range) and perform the tests indicated.

Signal Frequency (mc)	Connection to	Possible trouble
550	V503 rf amplifier plates secured by tube clip within V503 plate cavity (fig. 73).	V504 oscillator not operating: shorted or open C513 (mounted beneath V503 plate tube clip); open L513 (using R506 as coil form); shorted feedthrough capacitor C519; open coil L514 (adjacent to crystal mixer CR502); shorted rotor and stator segment blades of TUNING capacitor C520 section C or D; or defective cable connection between rf tuner termination CP502 (in crystal diode compartment) and input jack J509 (on if. preamplifier subassembly, fig. 75).
550	V503 rf amplifier cathode secured by tube clip within V503 cathode cavity (fig. 73).	Defective V503; open L511 or L512; open or shorted C516 (mounted beneath V503 cathode end of tube clip); open R507; open soldered connections to protruding terminal of feedthrough capacitor C521 (inserted in right exterior wall of casting, opposite C520A rotor blades); shorted C522, or open V503 ADJ control R508 (mounted on tuning unit framework assembly (fig. 72).
550	Main unit front-panel jack J705 ----------	Defective right-angle adapter CP504, or coaxial switch S501, or no connection between S501 output jack J504 and rf tuner input jack J508 (fig. 72). *Note:* See troubleshooting chart (para 67) for method of checking coaxial switch S501 and coaxial cable assembly W503.
850	V501 rf amplifier plate secured by tube clip within V501 plate cavity (fig. 74).	V502 oscillator not operating; shorted or open C507 (mounted beneath V501 plate tube clip); open L503 (using R501 as coil form); shorted feedthrough capacitor C503 (inserted in the wall separating CR501 diode compartment from V501 plate cavity); open coil L505 (in crystal diode compartment); shorted rotor and stator segment blades of TUNING capacitor C510 section C or D; or defective cable connections between rf tuner termination CP501 (inserted in crystal diode compartment wall) and input jack J507 (on if. preamplifier subassembly, fig. 75).
850	V501 rf amplifier cathode secured by tube clip within V501 cathode cavity (fig. 74).	Defective V501; open L501 or L502; open C501 (mounted beneath V501 cathode end of tube clip); open R502 (in crystal diode compartment); open soldered connections to protruding terminal of feedthrough capacitor C505 (inserted in right exterior wall of crystal diode compartment, fig. 74); or shorted C506. Open L504 or V501 ADJ control R503 (mounted on tuning unit framework assembly, fig. 72).
850	Main unit front-panel jack J705. ----------	Defective coaxial switch S501 with contact between input jack J502 and output jack J504, or no connection between output jack J504 and rf tuner input jack J506. *Note:* See troubleshooting chart (para 67) for method of checking coaxial switch S501 and coaxial cable assembly W502.

75. Overall Gain Measurements

Use the techniques outlined in *a* through *c* below when the output of the test set is abnormally low, even with the SIGNAL ATTENUATOR DB control rotated to its 0 CW ONLY position and the signal generator output level is set to produce a relatively large input signal to the receiver (para 71 through 74).

a. General Instructions. Connect the test set to the power source, set the front-panel controls to the positions indicated for the separate signal substitution checks for

each tuning unit (para 71 through 74), and observe the main unit panel meter for a full-scale pointer deflection on the upper scale calibrated in DECIBELS. The following data is representative of the gain measured on a typical tuning unit 1, 2, 3, and 4. Slight variations from one serial numbered equipment to another are permissible. Be sure to set the front-panel controls on the main unit and the applicable tuning unit as indicated in the following chart:

Control	Setting
Function switch	CV AVERAGE
Calibration switch	SERIES CAL & OPERATE
SIGNAL ATTENUATOR DB switch	20
GAIN control	Fully clockwise
SLIDEBACK control	Fully clockwise

b. Typical If. Amplifier Gain Data.

Tuning unit	Band (mc)	Test signal frequency	Connection to	Test signal amplitude required for full-scale meter indication (microvolts)
1	0.15-0.36	455 kc	Input jack J1 on step attenuator AT1	42
1	0.36-0.87	1,600 kc	Input jack J1 on if. step attenuator AT1.	47
2	20-70	10.7 mc	Input jack J1 on if. step attenuator AT201.	35
3	200-400	42 mc	Input jack J1 on if. step attenuator AT401.	1,400
3	200-400	42 mc	Connector plug P407, at input to if. preamplifier.	8
4	400-700	42 mc	Input jack J1 on if. step attenuator AT501.	2,000
4	400-700	42 mc	Input jack J509 on if. preamplifier	14

c. Typical Combined Rf Tuner and If. Amplifier Gain Data.

Tuning unit	Band (mc)	Test signal frequency	Connection to	Test signal amplitude required for full-scale meter indication (microvolts)
1	0.15-0.36	150 kc	SIGNAL INPUT jack J705, on main unit.	0.23
1	0.36-0.87	360 kc	Same as above	0.36
2	20-70	20 mc	Same as above	7
3	200-400	400 mc	Same as above	45
4	400-700	400 mc	Same as above	60

CHAPTER 3

REPAIRS AND ALIGNMENT

Section I. REPAIRS

76. Replacement of Parts, Minor Components for Use with Tuning Unit 1

a. General. After completing the tests outlined in paragraph 71, the signal substitution technique can be used for determining whether parts within the minor components supplied for use with tuning unit 1 require repair or replacement. These tests are performed with tuning unit 1 installed in the tuning unit compartment of the main unit. The following procedures are based on the assumption that sources of trouble in both tuning unit 1 and the main unit have been eliminated, and that there is no need for operating tuning unit 1, through the test harness, outside of the main unit. The following checks are to be made with tuning unit 1 installed in the main unit tuning unit compartment. In all tests, a cable assembly, consisting of a 3-foot length of RG-5B/U coaxial cable terminated by UG-18/U connectors, is used to couple the test signal from the output of the minor component under test to the main unit front-panel SIGNAL INPUT jack (J705). Set the front-panel controls as listed in paragraph 71*a*, except for using only band 1 of the MEGACYCLES switch (.15-.36) mc position. Apply the signal that is indicated in the signal frequency column of the charts in *b* below. Monitor the final output by observing an onscale indication on the main unit panel meter. If necessary, rotate the SIGNAL ATTENUATOR DB control to higher or lower steps than its initially recommended 20-db step position so that the relative amplitude of the test signal can be observed on the meter. A second method of monitoring the final output can be obtained by connecting the headset, through the headset cord, into the main unit front-panel PHONES jack. If the signal source is modulated at an audio frequency rate and an audio note is not heard in the headset, trouble is indicated. Isolate the trouble as indicated in the *Possible trouble and correction* column of the following charts, and repair or replace the defective part or parts. Connect tuning unit 1 signal generator, modulated at 400 cps, to the test set as shown in figure 79, and follow the procedures given in *b* below.

b. Coupler, Radio Frequency Interference CU-891/URM-85 (fig. 38 and 80).

Signal frequency	Connection to	Possible trouble and correction
255 kc (center of band 1 frequency range).	Ungrounded binding post on terminal block assembly of the CU-891/URM-85 (fig. 80). Connect grounded binding post on terminal block assembly to the same ground connection used by the signal generator and the test set. Connect output jack J1401 on the CU-891/URM-85 to the RG-5B/U coaxial cable.	Defective spring action in binding post; repair or replace binding post. If this correction does not remedy the trouble, disassemble the CU-891/URM-85 further by reference to the exploded view (fig. 80). Check for open coupling capacitor C1401 or C1402, or open wire lead connection between C1402 and interior protruding end of center conductor on output jack J1401, or bent or damaged pin on J1401. Repair or replace the defective part.

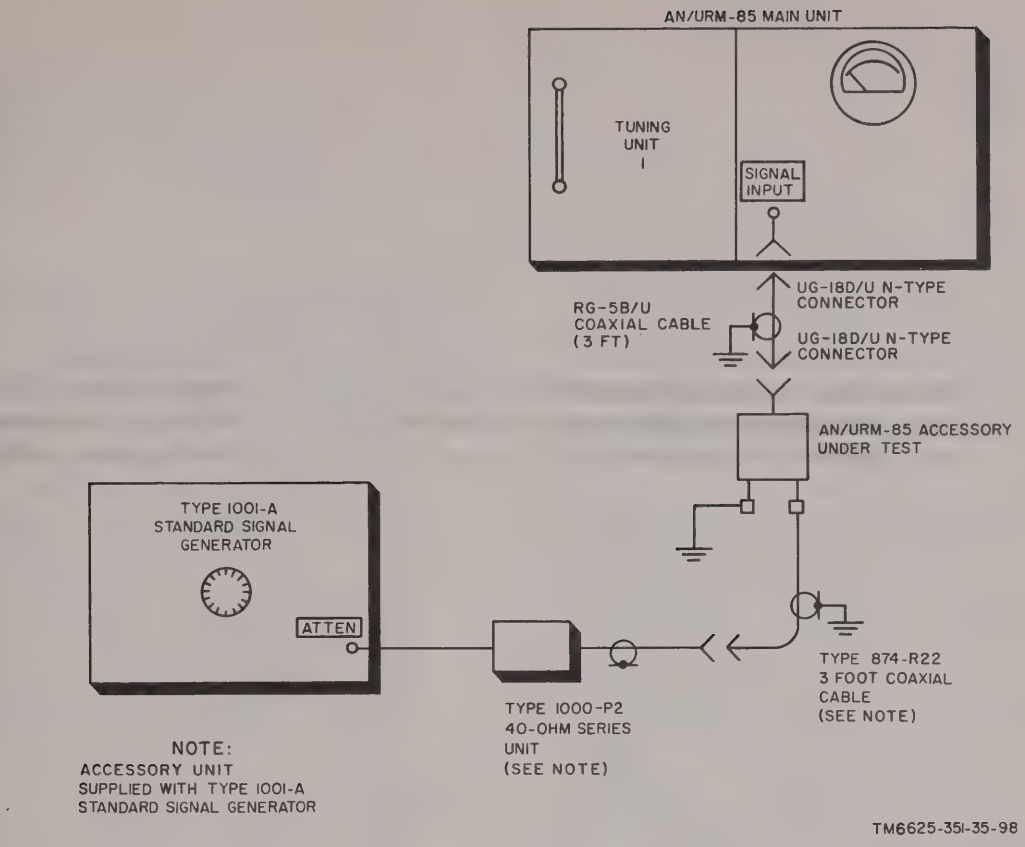

Figure 79. Test setup for checking tuning unit 1 minor components.

c. Coupler, Radio Frequency Interference CU-892/URM-85 (fig. 38 and 80). Although the CU-892/URM-85 (fig. 80) is designed for use with 500-ohm impedance audio-signal or powerline two-wire networks, a comparative check of its operating efficiency can be obtained by proceeding in a similar manner to *b* above. The mismatch between the 50-ohm output cable of the signal generator and the 500-ohm input impedance of the CU-892/URM-85 may cause degradation of the signal. This mismatch will result in a smaller amplitude indication, on the main unit panel meter and in the monitored headset audio signal, than that obtained with the CU-891/URM-85. Proceed as follows:

Signal frequency (kc)	Connection to	Possible trouble and correction
255 kc (center of band 1 frequency range).	Ungrounded binding post on terminal block assembly of the CU-892/URM-85 (fig. 80); connect grounded binding post on terminal block assembly to the same ground connection used by the signal generator and the test set. Connect output jack J1501 on the CU-892/URM-85 to the RG-5B/U coaxial cable.	Defective spring action in coupler binding post; repair or replace binding post. If this correction does not remedy the trouble, disassemble the coupler further by reference to the exploded view (fig. 80); check for open coupling capacitor C1501 or C1502, or open impedance-matching resistor R1501, or defective soldered connections between junction of input axial lead of resistor R1501 and output terminal of C1502 or between junction of axial lead of resistor R1501 and interior

Signal frequency (kc)	Connection to	Possible trouble and correction
		protruding end of center conductor on output jack J1501 (insert view, fig. 80), or bent or damaged pin on J1501. Repair or replace the defective part.

d. Coupler, Antenna CU-890/URM-85 for Vertical Antenna (fig. 37 and 81). Disconnect the signal generator from the test setup (fig. 79) and use the method of checking performance of this minor component as outlined in paragraph 43c, steps 63 through 69, TM 11-6625-351-12.

(1) In mounting the ground plane (fig. 82) on the antenna tripod, check for secure mechanical fit. Insert the protruding post at the top of the tripod mast through the hole provided on the ground plane hinged bracket; then secure the ground plane by rotating the two 1/4-turn fasteners on the higned bracket into their mating spring receptacles, provided on the tripod plate. If the thumbscrews, one each located at the ends of the antenna tilt rods (fig. 82), are broken or the threads are frozen, refer to the insert view in the lower right corner of this illustration for disassembly and replacement procedures. If the ground plane cannot be tilted from its horizontal position on the tripod, suspect trouble within the antenna tilt bracket and refer to the insert view at the left center area of the illustration for disassembly and replacement procedures.

Note: The three turnlock fastener receptacles at the center of the ground plane are not used with Coupler, Antenna CU-890/URM-85; they are provided for use with the discone (broadband) antenna. Also, the the four turnlock fastener studs (fig. 82) located one each at the corners of the ground plane serve no mounting function; they are provided for securely storing the ground plane within Case, Radio Interference Measuring Set Group CY-3094/URM-85.

(2) After the ground plane has been securely mounted to the antenna tripod, the protruding post on the tripod mast serves as the mounting post for the CU-890/URM-85. Insert the stud assembly at the bottom plate of the CU-890/URM-85 (fig. 81) all the way over the protruding post, and tighten the thumbscrew provided on the antenna coupler stud assembly. Insert the five series-connected lengths of Mast Section AB-21/GR into the ferrule assembly at the top of the CU-890/URM-85, and proceed with the equipment performance checklist as outlined in paragraph 43c, steps 63 through 69, TM 11-6625-351-12.

(3) If trouble is encountered in testing any one of the six bands, refer to the schematic diagram (fig. 37), and to the exploded view (fig. 81). Avoid unnecessary disassembly; follow the exploded view and disassembly only to the extent necessary to correct the trouble. Possible sources of trouble are:

(a) Open or shorted ferrite core step-down transformers T1101 through T1106, mounted on terminal board assembly TB1101.

(b) Band switch S1101 fails to make contact in any or all of the six positions. Check for continuity in all switch positions (fig. 37 and 81).

(c) Open circuit in the impulse generator injection network, consisting of series resistor R1101 and shunt resistor R1102 (fig. 37 and 81). Do not attempt to replace the individual resistors; they are housed within green color-coded connector assembly J1102 and are inaccessible; if trouble is isolated to this circuit, replace the entire connector assembly.

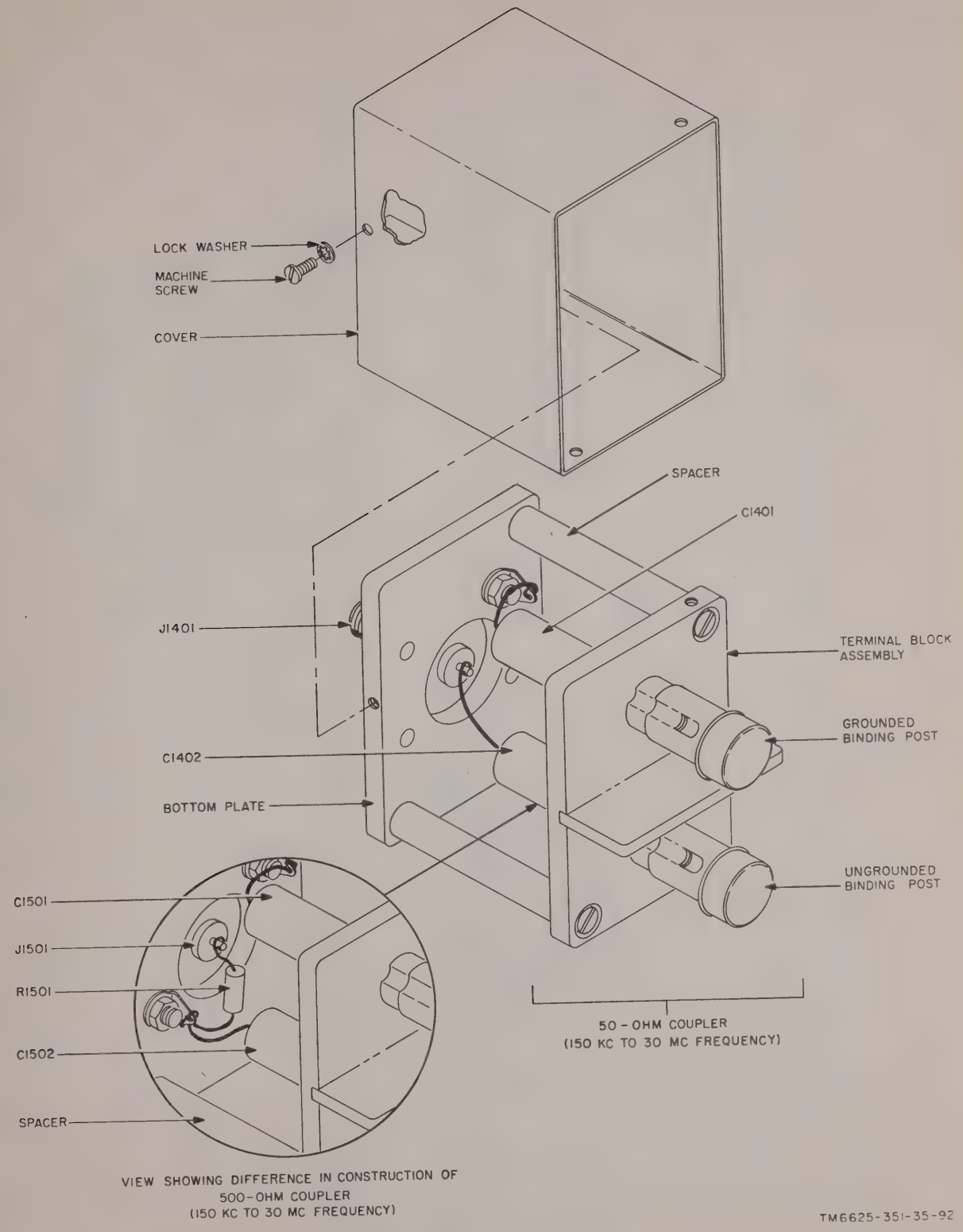

Figure 80. Couplers, Radio Frequency Interference CU-891/URM-85 and CU-892/URM-85, parts location diagram.

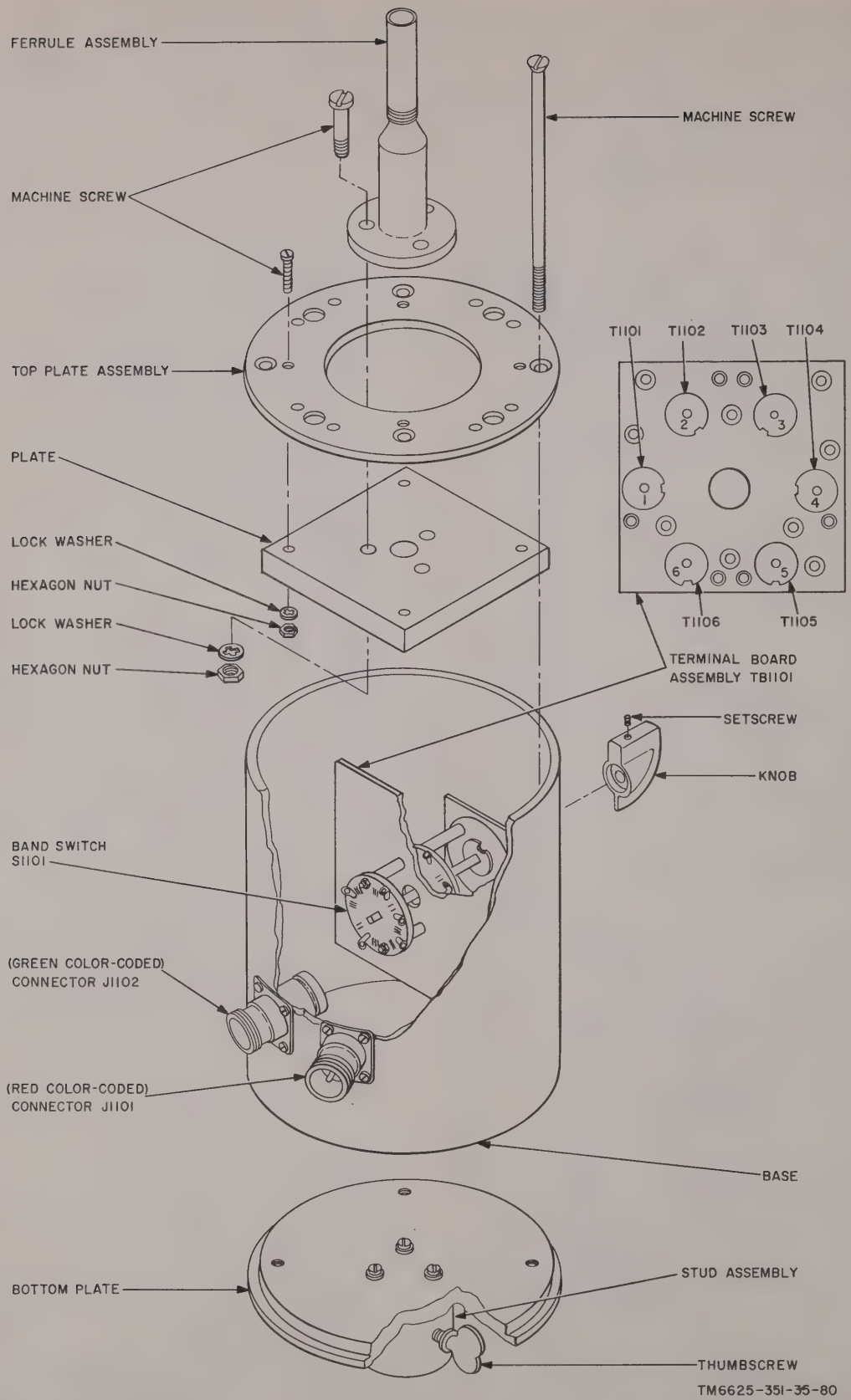

Figure 81. Coupler, Antenna CU-890/URM-85 for vertical antenna, parts location diagram.

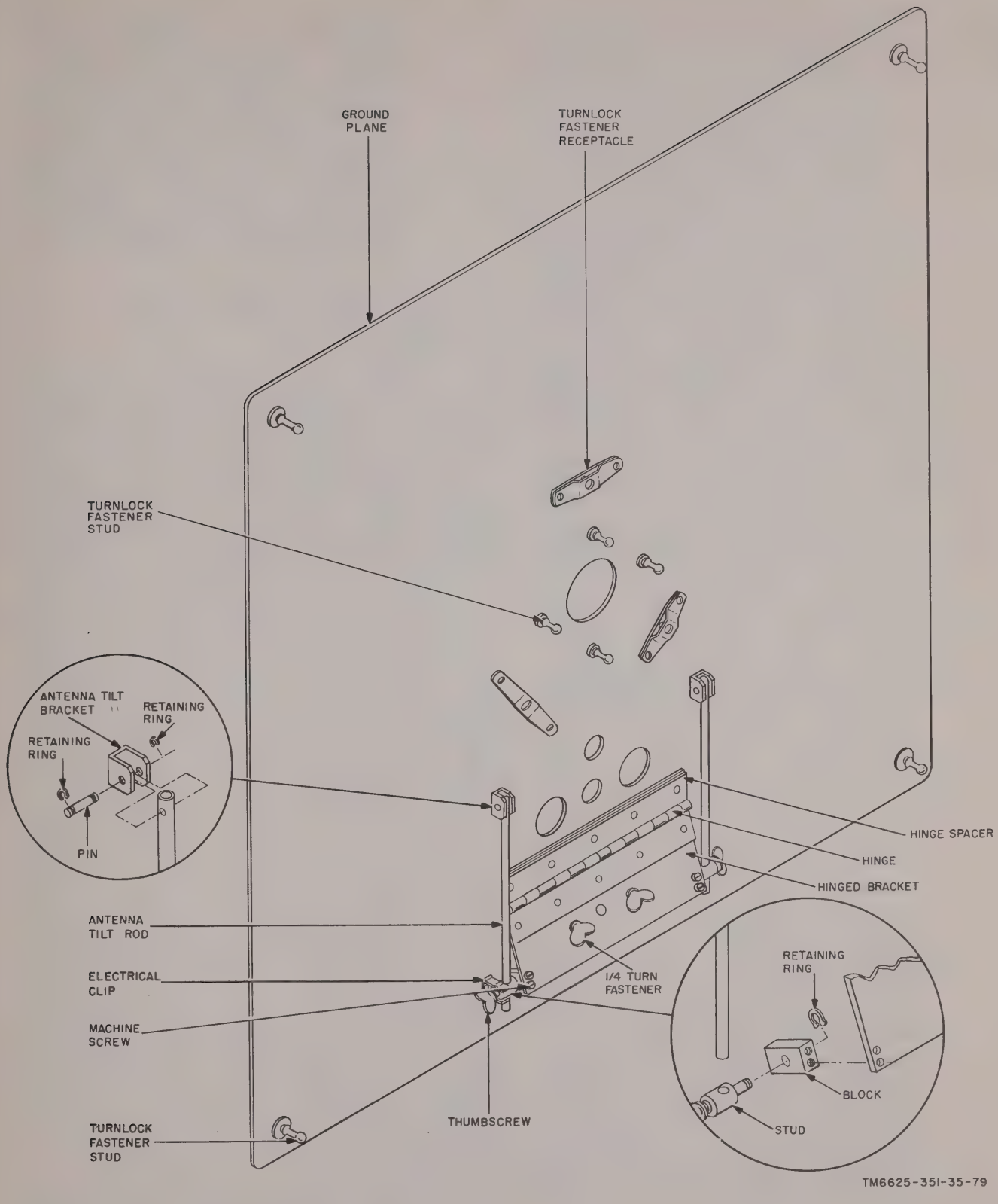

Figure 82. Reflector, Antenna AT-1027/URM-85, parts location diagram.

(d) Open or shorted circuit in the signal output red color-coded connector J1101 (fig. 81). Check for continuity from the center conductor to the wiper arm of switch section S1101B. Also check for infinite resistance between the center conductor of J1101 and the outer shell. If replacement of J1101 is required, be sure to tag the lead connected from S1101B wiper arm to J1101, before unsoldering, to facilitate proper rewiring.

e. Loop Antenna AT-1026/URM-85 (fig. 83). Disconnect the signal generator from the test setup (fig. 79), and use the method checking performance of this minor component as outlined in paragraph 43*b*, steps 70 through 72, TM 11-6625-351-12. If trouble is encountered in testing any one of the six bands, refer to the schematic diagram (fig. 36) and to the exploded view (fig. 83). Avoid unnecessary disassembly; follow the exploded view and disassemble only to the extent necessary to correct the trouble. Possible sources of trouble are:

(1) Open or shorted ferrite core step-up transformers T1001 through T1004, mounted on terminal board TB1001.

(2) Band switch S1001 fails to make contact in any or all of the six positions. In bands 5 and 6 (fig. 36), no coupling transformer is used. If trouble is encountered in either of these bands, suspect faulty contacts 5 and 6, and the wiper on section C of S1001.

(3) Open circuit in the impulse generator injection network, consisting of series resistor R1001 and shunt resistor R1002 (fig. 36). Do not attempt to replace the individual resistors, since they are housed and inaccessible within green color-coded connector assembly J1002; if trouble is isolated to this circuit, replace the entire connector assembly.

(4) Open or shorted circuit in the signal output red color-coded connector J1001. Check for continuity from the center conductor to the wiper arm of switch section S1001B. Also check for infinite resistance between the center conductor of J1001 and the outer shell. If replacement of J1001 is required, be sure to tag the lead connected from S1001B wiper arm to J1001, before unsoldering, to facilitate proper rewiring.

77. Replacement of Parts, Minor Components for Use with Tuning Units 2, 3, and 4

a. General. After completing the tests outlined in paragraphs 72 through 74, the signal substitution technique can be used for determining whether parts within the minor components supplied for use with tuning units 2, 3, and 4 require repair or replacement. These tests are performed with the applicable tuning unit installed in the tuning unit compartment of the main unit. Similar to the procedure outlined in paragraph 71*a*, the following procedures are based on the assumption that sources of trouble in the installed tuning unit and the main unit have been eliminated. All tests use Cable Assembly Set, Electrical MX-3410/URM-85 as the means of coupling the test signal from the output of the minor component under test to front-panel SIGNAL INPUT jack (J705). It is only necessary to test the performance of the minor component with either tuning unit 2, 3, or 4 installed in the main unit. For convenience, the 20- to 70-mc band of tuning unit 2 is used throughout the following procedures. Set the front-panel controls as listed in paragraph 72*a*; monitor the output signal by observing the pointer deflection on the main unit panel meter. If desired, simultaneously monitor the modulated test signal with the headset. Use tuning unit 4 signal generator as the signal source, with 1,000-cps modulation, and proceed as indicated in *b* below.

b. Coupler, Radio Frequency Interference CU-897/URM-85 (fig. 38 and 84). In the test setup of figure 79, replace tuning unit 1 signal generator with tuning unit 4 signal generator. Use an alligator clip to

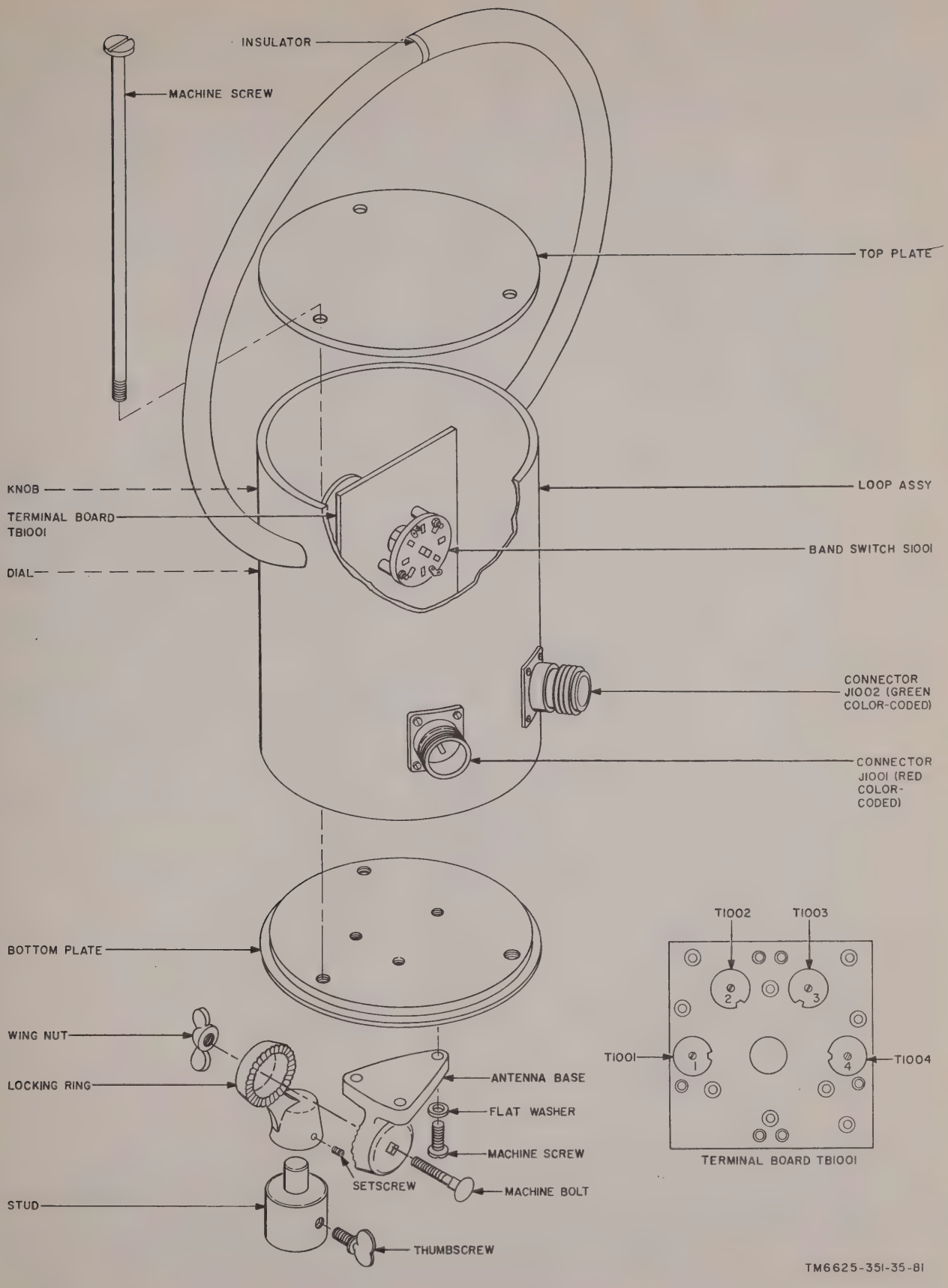

Figure 83. Loop Antenna AT-1028/URM-85, parts location diagram.

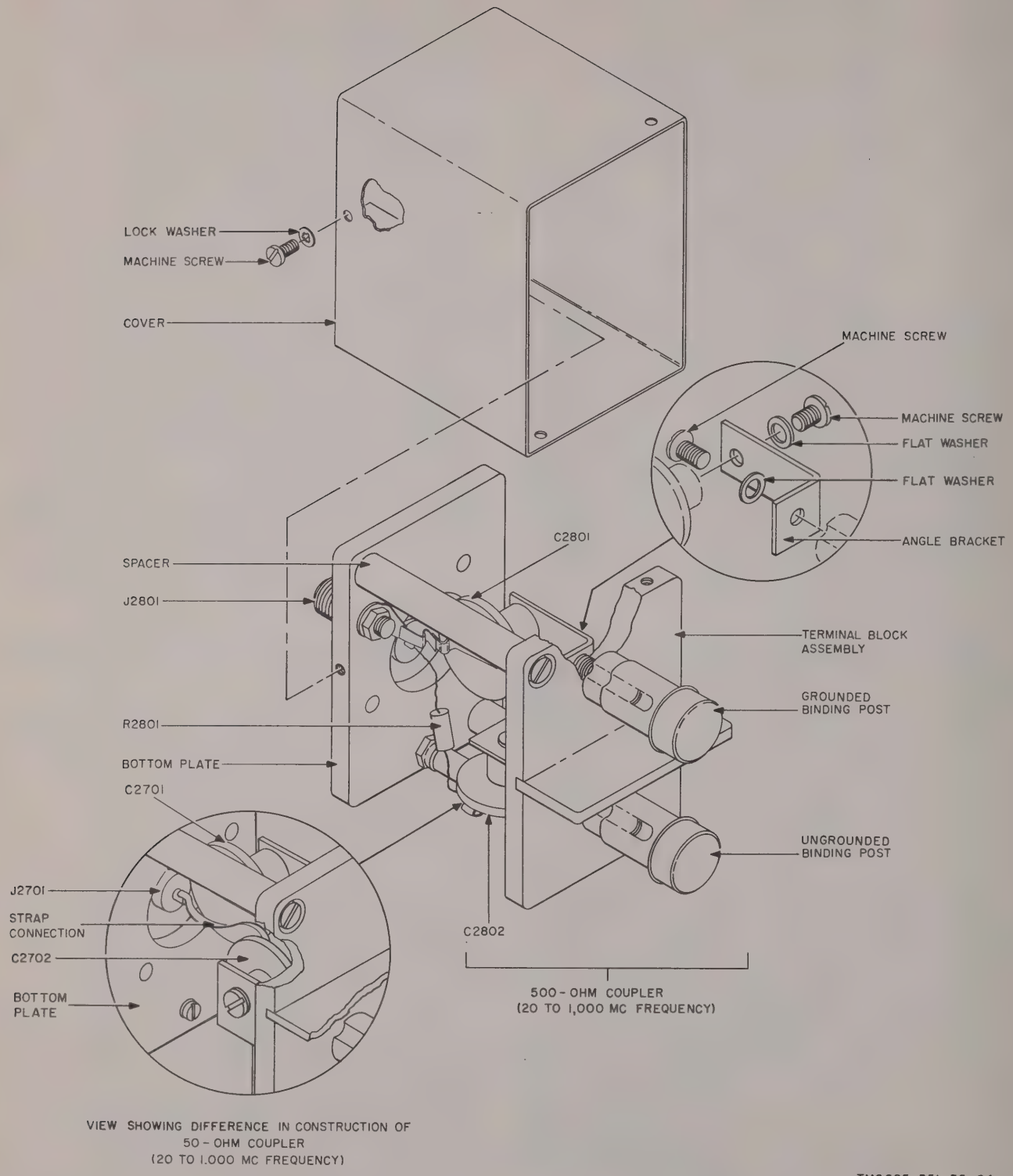

Figure 84. Couplers, Radio Frequency Interference CU-896/URM-85 and CU-897/URM-85, parts location diagram.

couple the output from the center conductor of Cord CG-55B/U (supplied with the signal generator) to a 2-inch length of wire. Strip the insulation off the last 1/4 inch of wire and insert it in the hole provided on the ungrounded binding post, when depressed. Release pressure of the binding post and check for secure mechanical gripping action. Apply the output of the CU-896/URM-85 from J2701 (fig. 84) to main unit front-panel SIGNAL INPUT jack J705 (fig. 79), and proceed as directed in the following chart:

Signal frequency	Connection to	Possible trouble and correction
45 mc (center of 20-70-mc tuner band of tuning unit 2).	Ungrounded lower binding post on terminal block assembly of the CU-896/URM-85 (fig. 84). Connect grounded upper binding post on terminal block assembly to the same ground connection used by tuning unit 4 signal generator and test set. Connect output jack J2701 on the CU-896/URM-85 to the input of the red color-coded cable of the MX-3410/URM-85.	Defective spring action in coupler binding post; repair or replace the defective binding post. If this correction does not remedy the trouble, disassemble the coupler further by reference to the exploded view (fig. 84). Check for open coupling capacitor C2701 or C2702; or for open soldered connection of conductor which couples the test signal from C2702 to the center conductor of output jack J2701; or for bent or damaged pin on J2701. Repair or replace defective part.

c. Coupler, Radio Frequency Interference CU-897/URM-85 (fig. 38 and 84). Although the CU-897/URM-85 (center of fig. 84) is designed for use with 500-ohm impedance audio-signal or powerline two-wire networks, a comparative check of its operating efficiency can be obtained by proceeding in a similar manner to *b* above. The mismatch between the 50-ohm output cable of tuning unit 4 signal generator and the 500-ohm input impedance of the coupler may cause degradation of the signal. This mismatch will result in a smaller indication, on the main unit panel meter and in the monitored headset audio signal, than that obtained with the CU-896/URM-85. Proceed as follows:

Signal frequency	Connection to	Possible trouble and correction
45 mc (center of 20-70-mc tuner band of tuning unit 2).	Ungrounded binding post on terminal block assembly of the CU-897/URM-85 (fig. 84). Connect grounded binding post on terminal block assembly to the same ground connection used by tuning unit 4 signal generator and the test set. Connect output jack J2801 on the CU-897/URM-85 to the input of the red color-coded cable of the MX-3410/URM-85.	Defective spring action in coupler binding post; repair or replace binding post. If this correction does not remedy the trouble, disassemble the coupler further by reference to the exploded view (fig. 84); check for open coupling capacitor C2801 or C2802; or open impedance-matching resistor R2801; or defective soldered connections between the junction of input axial lead of resistor R2801 and output terminal of C2802, or between the junction of axial lead of resistor R2801 and interior protruding end of center conductor on output jack J2801, or bent or damaged pin or J2801. Repair or replace the defective part.

d. Couplers, Antenna CU-893/URM-85 and CU-894/URM-85 (fig. 85). A method of checking the operation of Couplers, Antenna CU-893/URM-85 and CU-894/URM-85 is outlined in paragraph 43c, steps 5 through 44; TM 11-6625-351-12. After it is established that the source of possible trouble in the main unit and in the tuning unit (para 72 and 73) has been eliminated, check for possible trouble within the couplers as follows:

Item	Function	Possible trouble and correction
CU-893/URM-85 and CU-894/URM-85 clamp assembly. ms 361	Bushing assembly and locking pin at base of clamp assembly permits mounting of the entire coupler to the protruding post on the antenna tripod mast. Thumbscrew and eyebolt permit rotation of entire coupler about a 360° horizontal axis. To rotate the coupler, loosen the thumbscrew, rotate the coupler to the desired angle with reference to ground, and retighten the thumbscrew. *Note:* Only one clamp assembly is supplied with the complete test set. In transferring operation from the CU-893/URM-85 (20-220 mc) to the CU-894/URM-85 (200-400 mc), loosen the thumbscrew and open the clamp assembly on its hinge to clear the boom. Place the clamp assembly on the other boom and tighten the thumbscrew.	If bushing is damaged by being bent or marred, or locking pin is broken, replace entire clamp assembly. Frozen, bent, or stripped threads on eyebolt. Knock the pin out of the phenolic clamp assembly, at the base of the eyebolt, and replace the hardware.
CU-893/URM-85 block assembly	The protruding ferrules permit mounting of the required number of Mast Sections AB-21/GR terminated in Antenna Elements AT-1029/URM-85 (para 10, TM 11-6625-351-12), over the frequency range from 20-70 mc. The ferrules accept Antenna Element AT-1029/URM-85 only when operating over the frequency range from 70 to 220 mc. The inner diameter of each ferrule is threaded.	If Mast Section AB-21/GR or Antenna Element AT-1029/URM-85 cannot be threaded into the ferrule, check for bent ferrules or stripped threading. A broken ferrule cannot be replaced because it is permanently bonded to the block. Replace entire block assembly.
CU-893/URM-85 boom ---------	Provides a rigid protective covering for the two coaxial transmission lines which connect the ferrules to the balun (balanced to unbalanced transformer) box at the opposite end of the CU-893/URM-85.	If the phenolic boom tubing is cracked or broken, do not attempt repair. It is bonded at one end to the block assembly, and at the other end of the balun box. Replace the entire CU-893/URM-85.
CU-893/URM-85 balun box -----	Provides a transformation from balanced dipole elements to single-ended coaxial connector P1701.	If the panel meter on main unit of test set shows that no signal is being received, use the megacycle tape to check that the lengths of the telescopic antenna elements are set to resonate with the frequency of the incoming test signal. If this does not remedy the trouble and sources of trouble in the main unit and tuning unit have been eliminated (para 72), suspect defect within balun box. Disconnect red color-coded cable of Cable Assembly Set, Electrical MX-3410/URM-85 from jack P1701. Use an ohmmeter to check for continuity from center conductor of P1701 to its outer shell. Failure to obtain 0 ohm reading indicates possible open circuit in the coaxial cable pickup loop. Also check for continuity from one ferrule to the other. Failure to obtain 0 ohm reading indicates a possible defective soldered connection or open circuit in primary winding of coaxial line transfer loop.

Item	Function	Possible trouble and correction
		If malfunction is indicated, additional possible troubles exist in the two right-angle coaxial connectors which terminate each end of the two coaxial cables terminating in the balun box. If defect is present, repair or replace defective parts. *Caution:* **Do not shorten the coaxial cables which are wound on the post within the balun box. The lengths are critical, and cannot be changed from their original lengths.**
CU-894/URM-85 block assembly (fig. 85).	The Antenna element screw studs, recessed within the plexiglass block, permit mounting of Antenna Element AT-1028/URM-85 to the block assembly.	If the AT-1028/URM-85 cannot be threaded onto the screw stud, at each side of the block, it is unlikely that the setscrews are damaged because they are protected by the plexiglass block. Instead, check the threading on the inner diameter of telescopic Antenna Element AT-1028/URM-85. If its threading is bent or stripped, replace it.
CU-894/URM-85 boom ---------	Provides a rigid protective covering for the two coaxial transmission lines which connect the screw studs in the block assembly to the balun box at the opposite end of the CU-894/URM-85.	If the phenolic boom tubing is cracked or broken, do not attempt repair. Instead, replace the entire CU-894/URM-85.
CU-894/URM-85 balun box -----	Provides a transformation from balanced dipole elements to single-ended coaxial connector J1803.	If panel meter on main unit of test set shows that no signal is being received, use the megacycle tape to check that the length of the telescopic antenna elements are set to resonate with the frequency of the incoming test signal. If this does not remedy the trouble and sources of trouble in the main unit and tuning unit have been eliminated (para 72), suspect defect within balun box. Disconnect red color-coded cable of Cable Assembly Set, Electrical MX-3410/URM-85 from jack J1803. Use an ohmmeter to check for continuity from center conductor of J1803 to its outer shell. Failure to obtain 0 ohm reading indicates a possible open circuit in the coaxial cable pickup loop. Also check for continuity from one screw stud, in the block assembly, to the other. Failure to obtain 0 ohm reading indicates a possible defective soldered connection or open circuit in primary winding of coaxial line transfer loop. If malfunction is indicated, additional possible troubles exist in the two right-angle coaxial connectors which terminate each end of the two coaxial cables terminating in the balun box. If defect is present, repair or replace defective parts.

e. Antenna AS-1158/URM-85 and Coupler, Antenna CU-895/URM-85 (fig. 38). A method of checking the operation of Antenna AS-1158/URM-85 and Coupler, Antenna CU-895/URM-85 is outlined in paragraph 43c, steps 54 through 57, TM

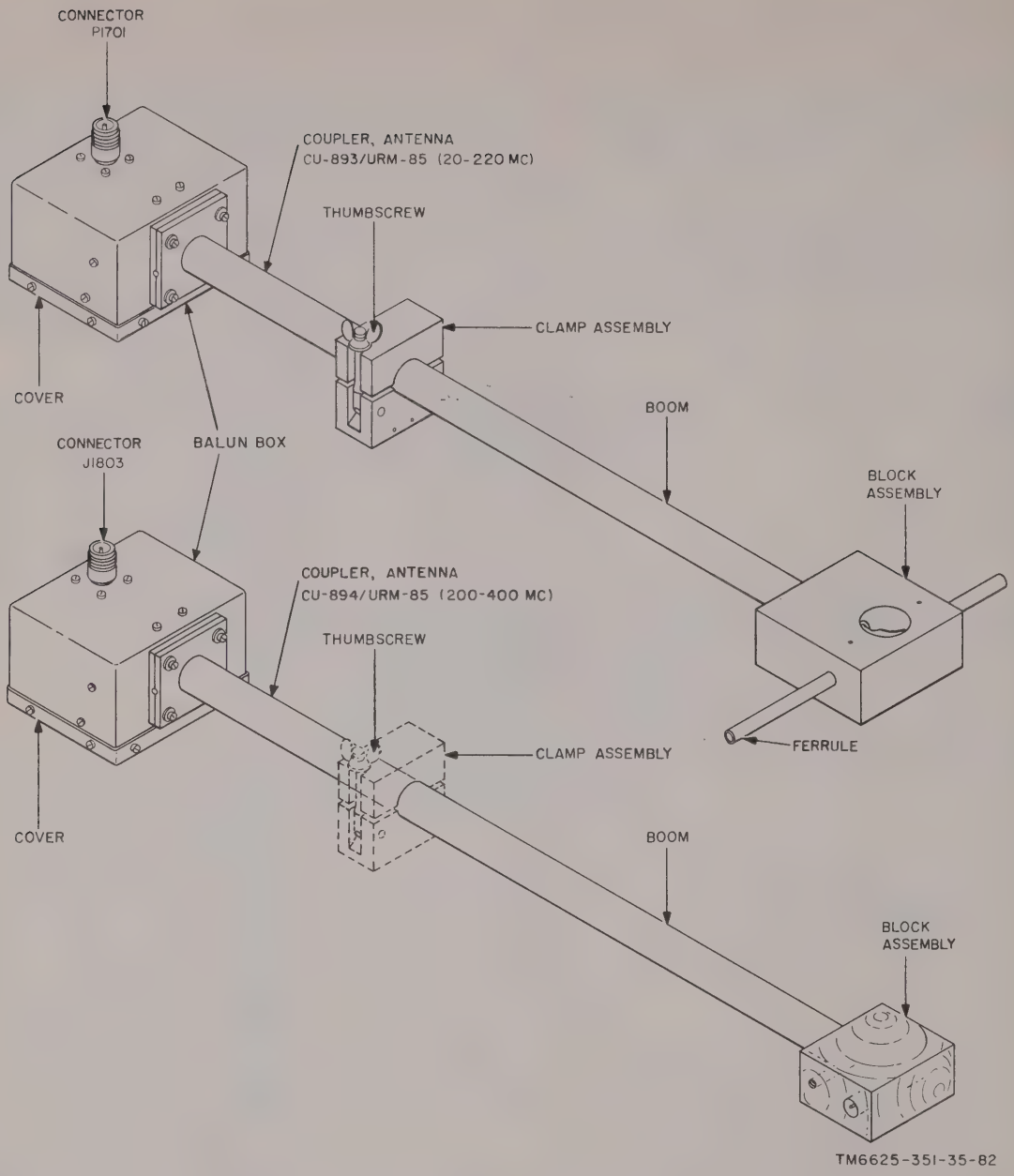

Figure 85. Couplers, Antenna CU-893/URM-85 and CU-894/URM-85, parts location diagram.

11-6625-351-12. After it is established that the source of possible trouble in the main unit and in the tuning unit (para 74) has been eliminated, check for possible troubles within these two minor components as follows:

(1) Defective connection between noncolor-coded connector J2002 on the unbalanced injection block and connector P1601 at the base of the AS-1158/URM-85.

(2) If the check in (1) above does not remedy the trouble, disconnect the unbalanced injection block from the AS-1158/URM-85 and use an ohmmeter to check for continuity as follows:

From connector terminal	To connector terminal	Required meter indication (ohms)
Male pin of noncolor-coded jack J2002 --	Female socket of red color-coded jack J2001 --	Zero
Outer shell of noncolor-coded jack J2002	Female socket of green color-coded jack J2003	47
Outer shell of noncolor-coded jack J2002	Outer shell of green color-coded jack J2003 --	4.5
Outer shell of noncolor-coded jack J2001	Outer shell of green color-coded jack J2003 --	Zero

(3) If a malfunction is indicated by performing the checks outlined in (2) above, replace the entire unbalanced injection block with one known to be in satisfactory operating condition.

(4) If the malfunction still exists after using a known good unbalanced injection block and a known good Cable Assembly Set, Electrical MX-3410/URM-85, replace Antenna AS-1158/URM-85.

f. Tuning Unit 4 Antenna AT-1030/URM-85 (fig. 36 and 86). A method of checking the operation of tuning unit 4 Antenna AT-1030/URM-85, with its integral corner reflector, is outlined in paragraph 43*c*, steps 48 through 53, TM 11-6625-351-12. After it is established that the source of possible trouble in the main unit and in tuning unit 4 (para 74) has been eliminated, check for possible troubles in mounting or connections to Antenna AT-1030/URM-85 as follows:

Item	Function	Possible trouble or correction
Clamp assembly ----------	*Note:* Transfer the clamp assembly from Coupler, Antenna CU-893/URM-85 or CU-894/URM-85 (fig. 85) to the phenolic boom of the AT-1030/URM-85.	Same as *d* above.
Telescoping antenna element --	Resonates the frequency of the incoming signal and applies signal to balun box.	If either dipole arm is bent, or one of the arms cannot be telescoped to the length indicated on the plastic megacycle ruler, replace the entire antenna element assembly, as shown in the insert view, lower right corner, figure 86. An individual dipole arm is not separately replaceable.
Boom ----------	Provides a rigid protective covering for the two coaxial transmission lines which connect the antenna elements to the balun box. The boom can be inserted further into, or pulled back toward the rear of the corner reflector by loosening the thumbscrew on the mounting plate shown in the insert view, left center area of figure 86.	If the phenolic boom tubing is cracked or broken, replacement of the entire Antenna AT-1030/URM-85 will be required. One side of the plastic megacycle ruler is calibrated to indicate the required spacing from the corner of the reflector to the dipole. If the threads on the thumbscrew are frozen or bent, replace both the plate and thumbscrew as one assembly.
Balun box ----------	Provides a transformation from balanced dipole elements to single coaxial connector J1903.	If panel meter on main unit of test set shows that the signal (known to be operating in the 400- to 1,000-mc frequency range) is not being received, check to see that the lengths of the dipole elements *and* the required spacing from corner of reflector are as required for the particular test frequency. If these steps do not remedy the trouble, suspect defect within balun box. Disconnect red color-coded cable of Cable Assembly Set, Electrical MX-3410/URM-85 from jack J1903. Check for continuity from center conductor of J1903 to its outer shell.

Item	Function	Possible trouble or correction
		Failure to obtain 0 ohm reading indicates a possible open circuit in the coaxial cable pickup loop. Also check for continuity from one antenna dipole arm to the other. Failure to obtain 0 ohm reading indicates a possible defective soldered connection or open circuit in primary winding of coaxial line transfer loop. Remove balun cover and repair or replace defective parts.
Reflector ----------	Provides power gain when the dipole-to-reflector corner spacing is correctly set (0.4 wavelength) at the particular frequency under measurement.	If reflector screens cannot be unfolded from their folded position, suspect bent or otherwise damaged hinges or locking arms (fig. 86). With the screen sections fully opened, push the sliding bracket (top right insert view, fig. 86) over the hinged sections. If these mechanical parts become defective, follow the exploded view (fig. 86) for disassembly and reassembly of replacement parts.

78. Replacement of Parts, Minor Components for Use with All Tuning Units

a. Multimeter, Remote ME-204/URM-85 (fig. 87). During operation or checking of the test set, the remote meter may be interconnected to the main unit by using Cord Assembly, Electrical CX-4305/U. One telephone plug PJ-068, at one end of the CX-4305/U, mates with main unit front-panel jack J704; the second telephone plug PJ-068, at the opposite end of the 30-foot cord, mates with telephone jack J1201 on the remote meter. With this interconnection completed, the pointer on the remote meter should duplicate the indications on the main unit panel meter. If malfunctioning of the remote meter is indicated after possible defects in the main unit have been eliminated (para 67), suspect a defective cord, telephone jack J1201, or microammeter M1201. Follow the exploded view (fig. 87) for disassembly and reassembly of replacement parts.

b. Cable Assembly, Special Purpose, Electrical Branched CX-6681/URM-85 (fig. 88). This cable assembly is used for interconnecting a tuning unit, when operating outside of the main unit for troubleshooting (para 67) or signal substitution (para 71-74), to the main unit. A typical test setup is shown in figure 46; the schematic diagram of the cable assembly is shown in figure 39. Other than open circuits that may develop in the soldered connections to plugs P902 and P903, possible sources of trouble may exist as follows:

(1) Failure of contact closure within microswitch S901, which is mounted to the bellhousing on connector P902. The contact should close when connector P902 is inserted as far as possible into its mating receptacle at the rear of a tuning unit. Failure to hear a clicking sound, when inserting the connector into the receptacle, is cause for suspecting a defective microswitch. Disassembly and reassembly is accomplished by the two screws that secure the microswitch to the bellhousing.

(2) Failure of contact closure within microswitch S902, which is mounted to the bellhousing on connector P903. The contact should close when connector P903 is inserted as far as possible into its mating receptacle J701 on the interior wall of the main unit tuning

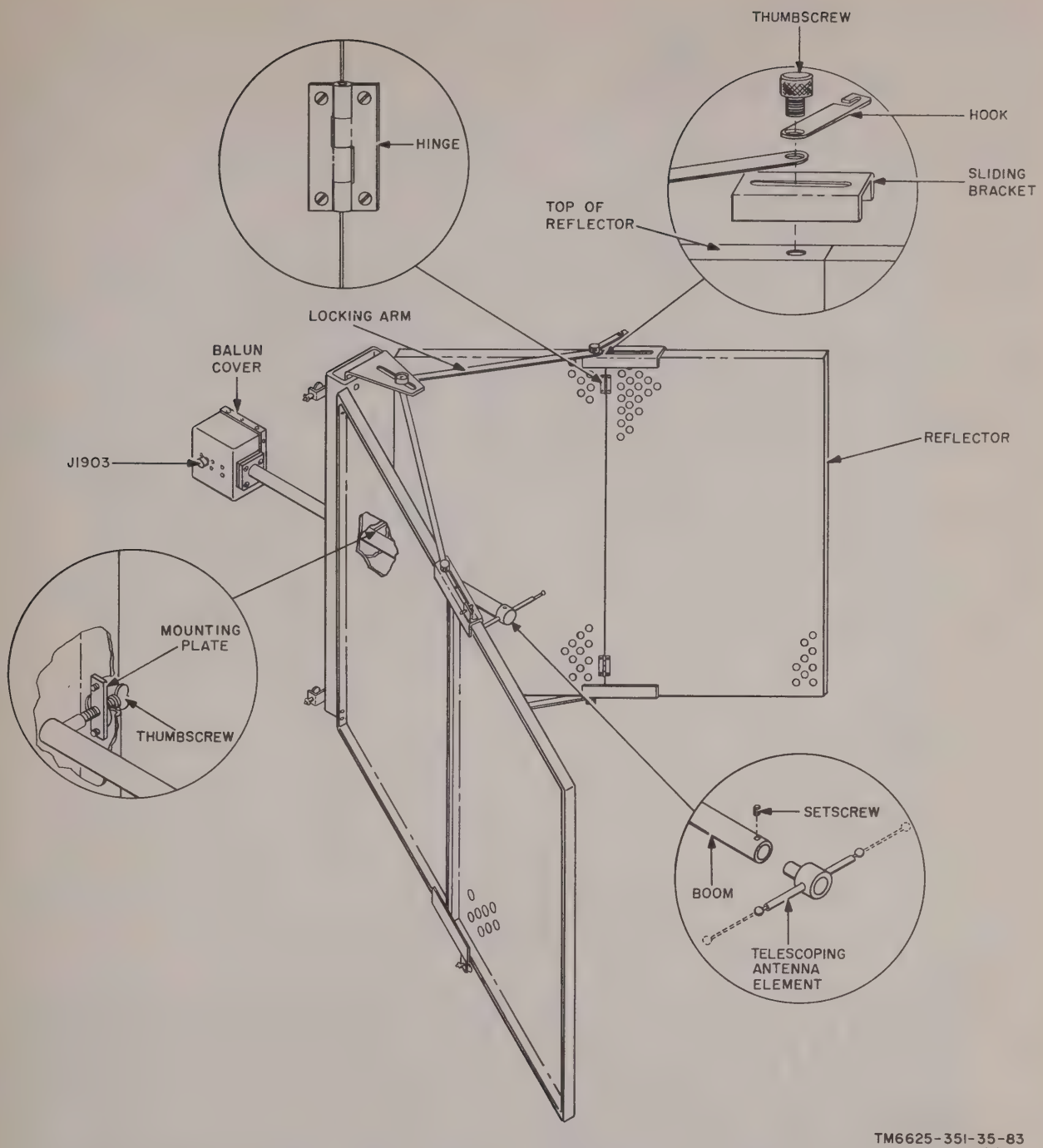

Figure 86. Tuning unit 4 Antenna AT-1030/URM-85, parts location diagram.

unit compartment (fig. 46). Failure to hear a clicking sound, when inserting the connector into the receptacle, is cause for suspecting a defective microswitch. Disassemble and replace as indicated in (1) above.

(3) Failure of two-prong male connector P901, with its wiring, to function as a jumper connection across mating jack J702 mounted on the right interior wall of the tuning unit compartment (fig. 46). With connectors P902 and P903 inserted into their mating receptacles, microswitches S901 and

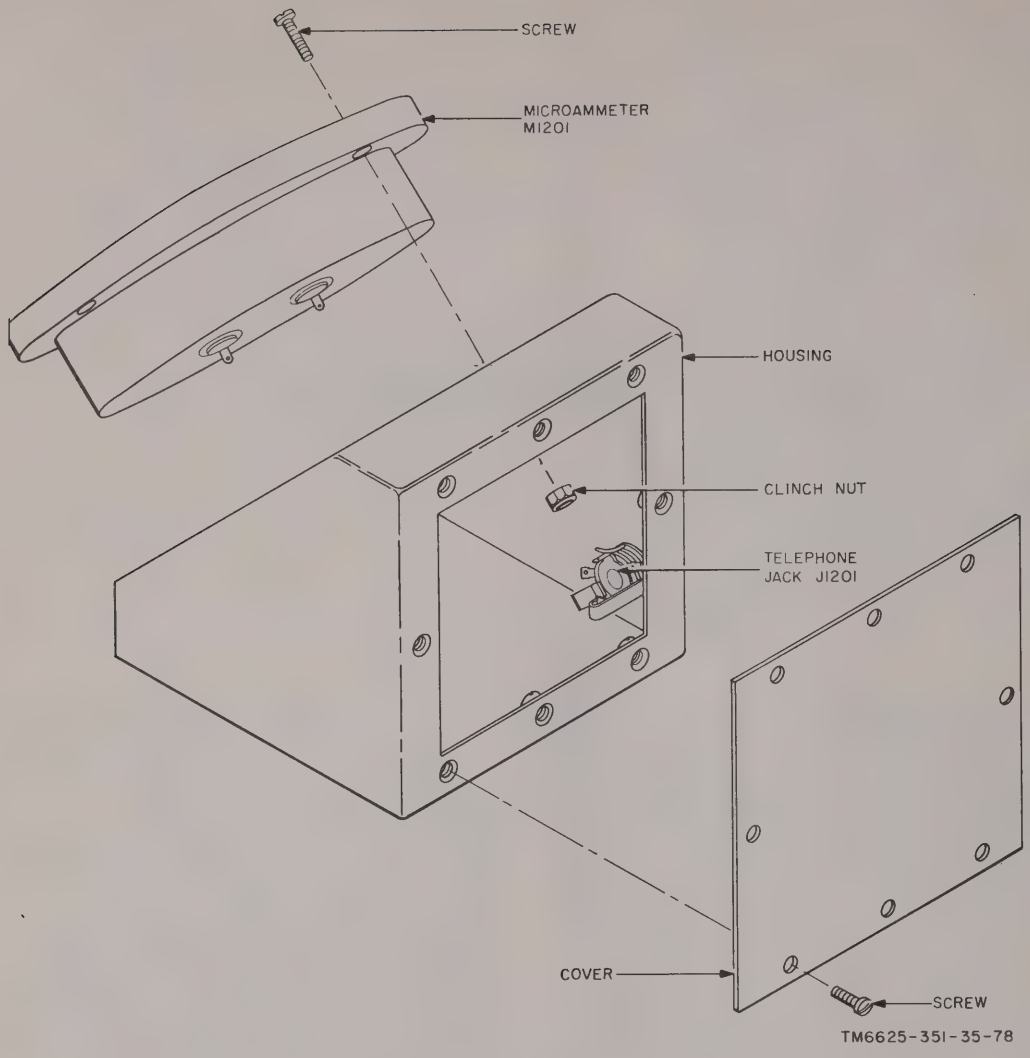

Figure 87. Multimeter, Remote ME-204/URM-85, parts location diagram.

S902 known to be closed, and with operating power applied to the main unit, failure of the pilot lamp and electron tubes in the tuning unit to be illuminated indicates possible trouble in the wiring of P901. Refer to the schematic diagram (fig. 39), use an ohmmeter to check for continuity and isolation of the defect, and repair the cause of malfunctioning.

c. *External Transformer* (fig. 89). A method of checking the operation of the external transformer is outlined in paragraph 43*c*, steps 1 through 3, 18, 19, and 79, TM 11-6625-351-12. If the component fails to operate as indicated in the equipment performance checklist (para 43, TM 11-6625-351-12). refer to the troubleshooting procedures as outlined in paragraph 67*c*(1) of this manual. If power transformer T801 is established as the defective part, be sure to tag and identify the leads to the six terminals before unsoldering; this will facilitate rewiring. Refer to the exploded view (fig. 89) for disassembly and reassembly. of replacement parts.

79. Replacement of Parts, Main Unit

Note: Several parts used in the main unit have smaller tolerances than those used in most radio equipment. All resistors, R741 through R749, and R751 through R761, which are part of the impulse generator output controls S707 and S708 (fig. 53)

are precision ±1 percent tolerance parts. In addition, resistors R709, R710, R716, R722, R723, and R724, which are mounted on function switch S702 (fig. 53), are precision ±1 percent tolerance parts. Also, resistors R713 and R714, which are mounted on terminal board TB705 (fig. 43) have ±1 percent tolerance. If these parts require replacement, use the *exact* value of the part removed. If even slightly different values are used, the accuracy of the test set will be affected.

a. Disassembly Procedure for Six-Step Signal Attenuator AT702 (fig. 52 and 90). If the source of malfunctioning has been localized to six-step signal attenuator AT702 (para 67c(2)), disassemble the attenuator by referring to figure 90 and then follow the procedures given in (1) through (6) below.

(1) Remove the three machine screws (1) and lockwashers (2) from the rear fixed plate (3). Remove the rear fixed plate with attaching parts (4 through 10).

(2) Disconnect the rear moveable plate (11) from the connecting link rod (16) by removing the machine screw (14) and bushing (15). Slide the rear movable plate with attached connector J718 (13) off the two sleeve spacers (53) and attenuator shaft (56).

(3) Disconnect the front movable plate (20) from the connecting link rod (19) by removing the machine screw (17) and bushing (18).

(4) Loosen the two setscrews (48) that secure the guide (49) to one of the sleeve spacers (53). Remove the guide.

(5) Loosen two setscrews (23) on the bridge (24), and slide the bridge and barrel assembly (34) off the two sleeve spacers (53) and attenuator shaft (56).

(6) To remove a fixed attenuator (38 through 43) from the barrel assembly (34), stand the barrel assembly on its end. Remove the three machine screws (35) and lockwashers (36) from the locating ring (37), and lift the locating ring off

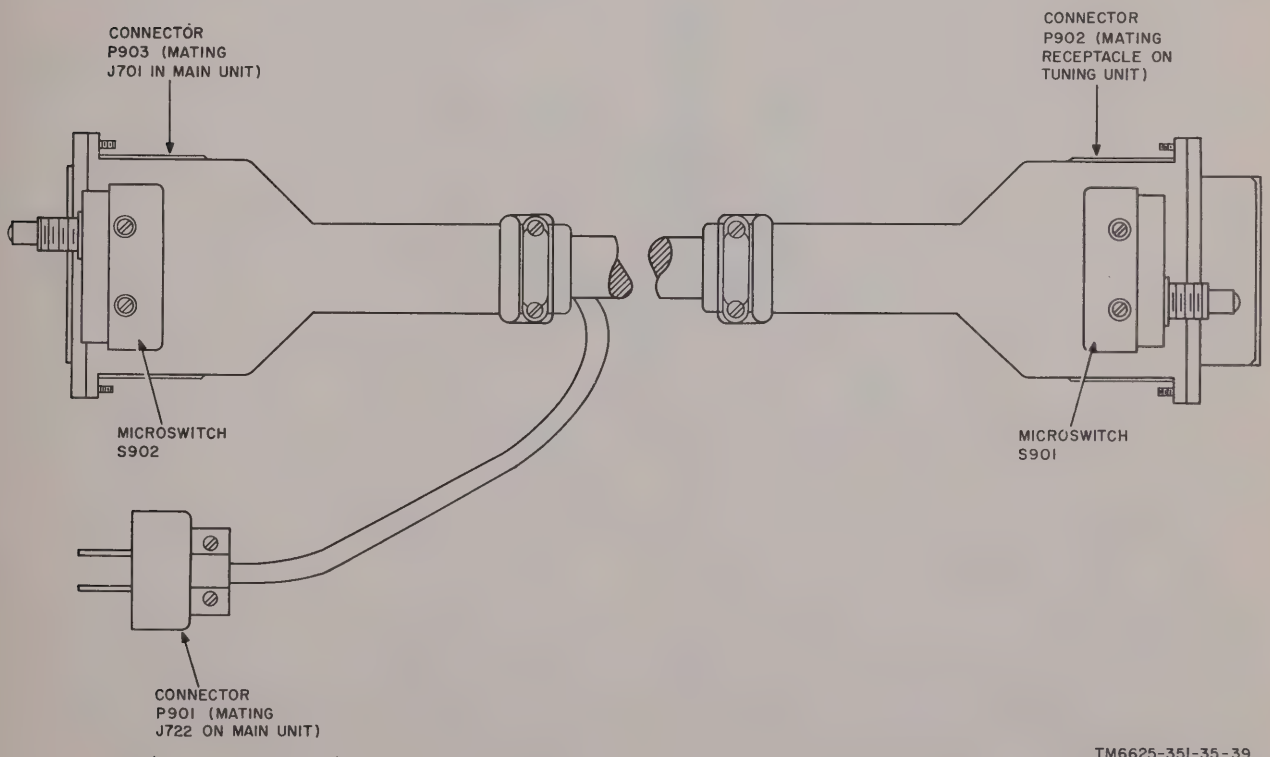

Figure 88. Cable Assembly, Special Purpose, Electrical Branched CX-6681/URM-85, parts location diagram.

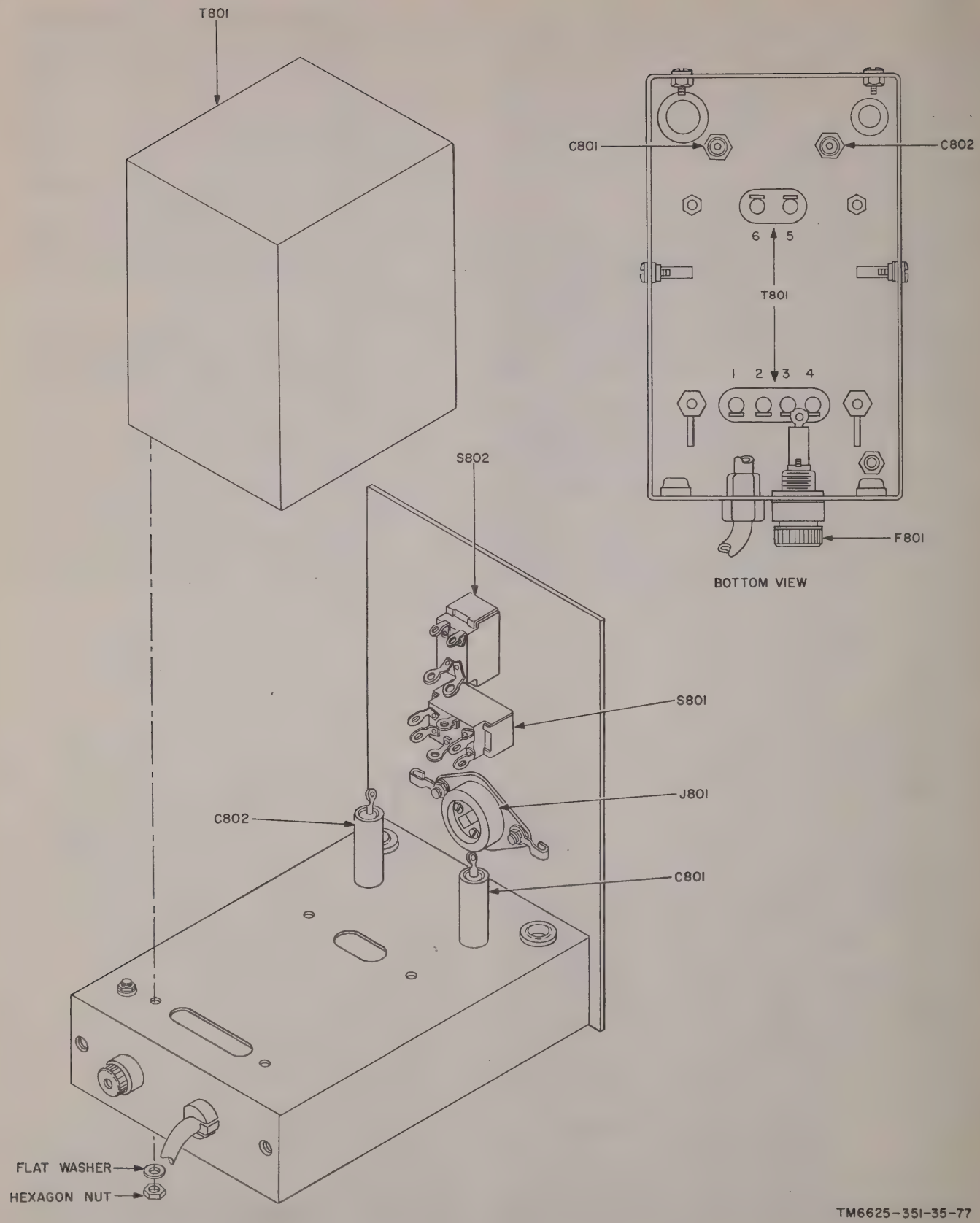

Figure 89. Transformer, Power, Isolation and Step-Down TF-248/G, parts location diagram.

the barrel assembly. Twist the defective fixed attenuator to free its two lugs from the grooves in the connecting tube (44).

Caution: **Fixed attenuator values are marked on the rear locating ring (47). Be sure to replace the fixed attenuators in their proper locations. When replacing either locating ring (37 or 47), make sure that the flats in the center hole of each locating ring align. The three machine screws (35 or 45) will then line up with the mating holes on the connecting tube (44).**

b. Reassembly Procedure for Six-Step Signal Attenuator AT702 (fig. 90).

(1) Working from the rear of the attenuator, assemble the barrel assembly (34). Position the assembly so that the markings on the rear locating ring (47) face the repairman.

(2) Place the assembled bridge (24) against the barrel assembly (34). Orient the spring (32) and roller (33) as shown in figure 90.

(3) Slide the bridge and barrel assembly together on the two sleeve spacers (53) and attenuator shaft (56), respectively; orient them as shown in figure 90. Do not tighten the setscrews (23) at this point.

(4) Connect the front movable plate (20) to the connecting link rod (19); use the machine screw (17) and bushing (18).

(5) Slide the guide (49) on the third sleeve spacer (53) as shown in figure 90. The thicker ridge of the guide should face the front of the attenuator. Do not tighten the setscrew (48) at this point of reassembly.

(6) Engage the rear locating ring (47) with the groove of the guide (49).

(7) Install the rear movable plate (11) on the attenuator shaft (56) and the two sleeve spacers (53) that engage the bridge (24).

(8) Connect the rear movable plate (11) to the connecting link rod (16); use the machine screw (14) and bushing (15).

(9) Install the assembled rear fixed fixed plate (3) so that its notched groove accomodates connector J718 (13). Tighten the rear fixed plate (3) to the sleeve spacers (53) with the three machine screws (1) and lockwashers (2).

(10) Pull the front and rear movable plates (11 and 20) against the front and rear fixed plates (3 and 52). Hold the plates in this position, and tighten the two setscrews (23) that secure the bridge (24) to the sleeve spacers (53).

(11) Push the assembled attenuator closed. Now tighten the two setscrews (48) that secure the guide (49) to the sleeve spacer. Be sure to engage the groove of the guide with the rear locating ring (47). Check for smooth riding action without binding.

(12) Hold the assembled attenuator closed, and orient the roller (33) so that it makes contact simultaneously with two of the fixed attenuators (38) through 43). Tighten the screw (30), and check to see that the roller is properly centered.

c. Replacement of Fixed 20-DB Attenuator AT701 (fig. 51-52). Fixed 20-db attenuator AT701 is in series with the output of inpulse generator G701 (fig. 51) only when the front-panel calibration switch is in the SHUNT CAL position. A convenient method of checking the operation of fixed 20-db attenuator AT701 is to set the IMPULSE GENERATOR DB ABOVE 1 μV/MC ON-OFF switch ON and to set the calibration switch to the SHUNT CAL position. Set the impulse generator coarse and fine output controls to a high setting, such as 80. If the panel meter on the test set shows a pointer deflection, this is an indication that the impulse generator is producing an output calibrating signal; then connect one of the series-calibrated antennas (such as the loop, vertical, or discone antenna, depending on the tuning unit used) to the IMPULSE OUTPUT jack on the main unit front panel. Use the green color-coded

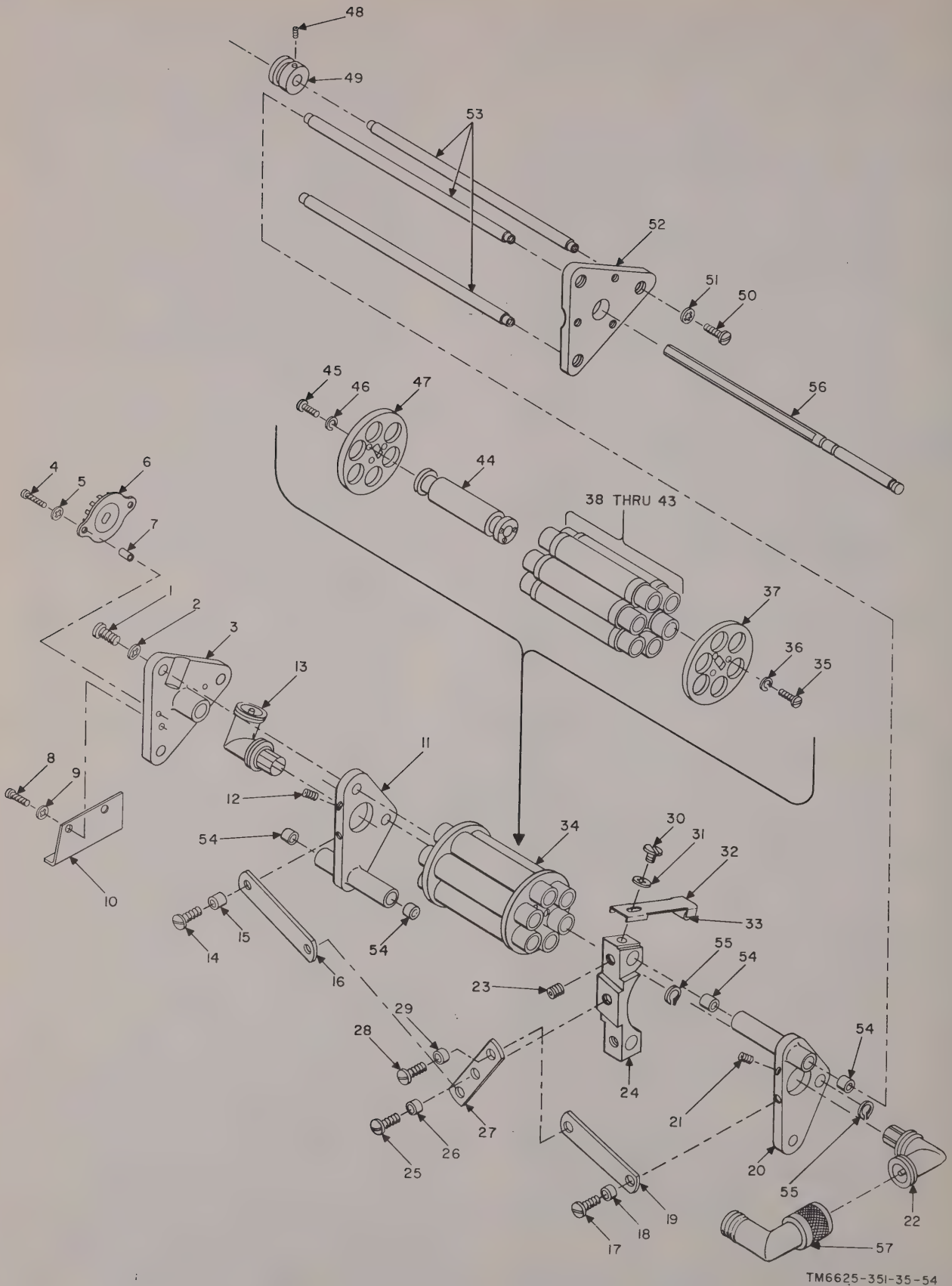

TM6625-351-35-54

Figure 90. Six-step signal attenuator AT702, parts location diagram.

1 Machine screw
2 Lockwasher
3 Rear fixed plate
4 Machine screw
5 Lockwasher
6 Rotary switch section S701
7 Sleeve spacer
8 Machine screw
9 Lockwasher
10 Support
11 Rear movable plate
12 Setscrew
13 Connector J718
14 Machine screw
15 Bushing
16 Connecting link rod
17 Machine screw
18 Bushing
19 Connecting link rod
20 Front movable plate
21 Setscrew
22 Connector J719
23 Setscrew
24 Bridge
25 Machine screw
26 Bushing
27 Center connecting link rod
28 Machine screw
29 Bushing
30 Machine screw
31 Lockwasher
32 Spring
33 Roller
34 Barrel assembly
35 Machine screw
36 Lockwasher
37 Locating ring
38 Fixed attenuator
39 Fixed attenuator
40 Fixed attenuator
41 Fixed attenuator
42 Fixed attenuator
43 Fixed attenuator
44 Connecting tube
45 Machine screw
46 Lockwasher
47 Locating ring
48 Setscrew
49 Guide
50 Machine screw
51 Lockwasher
52 Front fixed plate
53 Sleeve spacer
54 Sleeve bushing
55 Retaining ring
56 Attenuator shaft
57 Right angle adapter CP705

Figure 90—Continued.

cable of Cable Assembly Set, Electrical MX-3410/URM-85 for this connection. Use the red color-coded cable to interconnect the second jack on the antenna to the SIGNAL INPUT jack on the main unit. With the calibration switch now in the SERIES CAL & OPERATE position, and with the impulse generator output controls remaining in their original positions, the panel meter should show the same indication as in the shunt calibration condition. Failure to obtain this correspondence in meter indications is cause for suspecting a defect in the connections to fixed 20-db attenuator AT701, or in the attenuator itself. The attenuator is mounted in a horizontal position above the main deck of the chassis and adjacent to electron tube V706 and dual-section filter capacitor C733 (fig. 52). To remove the attenuator for inspection and replace it, proceed as follows:

(1) Unthread the knurled ring of right-angle adapter CP702 from the output end of fixed 20-db attenuator AT701 (fig. 52).
(2) Unthread the fixed attenuator from right-angle adapter CP703, which is mounted directly beneath the impulse generator housing.
(3) Use an ohmmeter to check the fixed attenuator for continuity from center conductor at the male N-type connector to the center conductor of the female N-type connector. An infinite ohmmeter reading indicates an open circuit within the attenuator which cannot be repaired in the field. Also check for infinite resistance from the center conductor of either the male or female connector to the outer shell of the attenuator. If a reading of 0 ohm is obtained, the attenuator has developed an internal short circuit which cannot be repaired in the field.
(4) If either of the defects outlined in (3) above is present, use a known good replacement fixed 20-db attenuator AT701 and install it in the main unit by reversing the disassembly procedure of (1) and (2) above.

d. Replacement of Parts in Filter Box for Connector J701, Rear of Main Unit (fig. 51). The parts mounted within the filter box function to decouple rf and if. currents from entering the various ac and dc outputs developed by the main unit power supplies. The decoupling components consist of 1,000-uuf feedthrough bypass capacitors (C741 through C758), and 7-microhenry series-connected rf chokes (L701 through L716 and L718). Each choke is enclosed in a green insulated coating. If these parts require replacement, use only an identical item for the part removed. Refer to figure 45 for the reference symbol identification and for typical voltage and resistance values that should exist at the terminals of the feedthrough capacitors. Failure to obtain correspondence between a measured value and that indicated in figure 45 requires troubleshooting and replacement of the defective part or parts.

e. Disassembly and Replacement of Other Parts. Disassembly and replacement of other parts in the main unit are obvious from the exploded view illustrations. The following chart identifies the figure number and the major subassemblies shown on the applicable illustration.

Figure	Major parts and subassemblies
51	Interior of front panel and parts mounted on top of chassis, voltage regulator assembly shown in position on upper deck, and filter box cover removed from rear of chassis.
52	Additional parts mounted on front panel and top of chassis; partition separating upper deck from main deck exploded view for clarity; location of chassis adjustment controls R762, R776, R778, R789, S704, and S709; mounting plate for coaxial relay K701 with right-angle adapter CP701; components mounted on terminal boards TB701 and TB704.
53	Parts mounted on function switch S702, impulse generator coarse output level control S707, and impulse generator fine output level control S708.
54	Parts mounted within perforated shield box of voltage regulator assembly, on upper deck of main unit chassis.
55	Parts mounted on wiring side of chassis. For details of components mounted on terminal boards TB702, TB703, TB705, and TB706, see figure 43.

80. Replacement of Parts, Tuning Units

Note: Several parts used in the tuning units have smaller tolerances than those used in most radio equipment. All resistors which are part of the if. step attenuators are precision ±1 percent tolerance parts. For tuning unit 1 if. step attenuator AT1, these parts are R33 through R37; for tuning unit 2, they are AT201R1 through AT201R5; for tuning unit 3, they are AT401R1 through AT401T5; for tuning unit 4, they are AT501R1 through AT501R5. If these parts require replacement, use the *exact* value of the part removed. If even slightly different values are used, the accuracy of the test set will be affected.

a. Tuning Unit 1. The major subassemblies within tuning unit 1, working clockwise from the top center of figure 56, consist of the items listed in the chart that follows. Identification of the parts within each subassembly can be determined by referring to the individual illustration of the subassembly. Follow the exploded view illustration for removal and reassembly procedures of a defective subassembly. Avoid unnecessary disassembly; disassemble only to the extent necessary to replace or repair the defective part.

Subassembly	Detailed identification of parts
Rf tuner chassis.	Top side of rf tuner chassis shown in upper right corner of figure 56; parts mounted on bottom side shown in figure 57.
If. input selector.	Parts mounted within subassembly (fig. 59).
Six-position turret tuner.	Parts mounted on each of the six turret tuner segments (fig. 58).
1,600-kc if. amplifier.	Parts mounted on wiring side (fig. 61).
If. step attenuator AT1.	Parts mounted within subassembly (fig. 60).
455-kc if. amplifier.	Parts mounted on wiring side (fig. 62).
Detector and electrometer assembly A1.	Parts within sealed assembly are not separately replaceable; if sealed unit is defective, disconnect multipin plug P9 from mating jack A1J2, on interior side of tuning unit 1 chassis. Remove the four screws and washers that secure sealed assembly to rear of framework assembly; then gently pull entire sealed assembly straight back from the framework to disengage coaxial jack A1J1 from mating plug P7 (fig. 56) at rear plate of if. output selector. Reassemble replacement sealed assembly in reverse order.
If. output selector.	Parts mounted within subassembly (fig. 63).

b. Tuning Unit 2. The major subassemblies within tuning unit 2, working clockwise from the lower left corner of figure 64, consists of the items listed in the chart below. Identification of the parts within each subassembly can be determined by referring to the individual illustration of the subassembly. Follow the exploded view illustration for removal and reassembly procedures of a defective subassembly.

Caution: **At the higher frequencies received by tuning units 2, 3, and 4 (20 to 1,000 mc), the circuits and their wiring layout are more critical than in tuning unit 1. Avoid unnecessary disassembly and replacement of wiring. Disassembly only to the extent necessary to repair a defect. Restore the layout of the wiring to its original position before disassembly, whenever possible.**

Subassembly	Detailed identification of parts
Rf tuner -----	Parts mounted on wiring side, accessible when rf tuner cover is removed (fig. 65).
Detector and electrometer assembly A201.	Parts within sealed assembly are not separately replaceable; if sealed unit is defective, disconnect multipin plug P213 from mating jack A201J2, on interior side of tuning unit 2 chassis. Remove the four screws and washers that secure sealed assembly to rear of framework assembly; then gently pull entire sealed assembly straight back from the framework to disengage coaxial jack A201J1 from mating plug P212 (fig. 67) at output end of if. amplifier. Reassemble replacement sealed assembly in reverse order.
If. step attenuator AT201.	Parts mounted within this subassembly are identical in tuning units 2, 3, and 4 (fig. 66).
10.7-mc if. amplifier.	Parts mounted on wiring side (fig. 67).

c. Tuning Unit 3. The major subassemblies within the tuning unit 3, working clockwise from the lower left corner of figure 68, consist of the items listed in the chart that follows. Identification of the parts within each subassembly can be determined by referring to the individual illustration of the subassembly. Follow the exploded view illustration for removal and reassembly procedures of a defective subassembly. Before attempting repairs or replacement, refer to the caution in *b* above.

Subassembly	Detailed identification of parts
Rf tuner -----	Parts are accessible for replacement by removing access covers from left and right sides of rf tuner chassis; two interior views shown in figure 69.
Detector and electrometer assembly A401.	Parts within sealed assembly are not separately replaceable; if sealed unit is defective, disconnect multipin plug P414 from mating jack A401J2 on interior side of tuning unit chassis. Remove the four screws and washers that secure sealed assembly to rear of framework assembly; then gently pull entire sealed assembly straight back from the framework to disengage coaxial jack A401J1 from mating plug P413 (fig. 71) at output end of if. amplifier. Reassemble replacement assembly in reverse order.
If. step attenuator AT401.	Parts mounted within this subassembly are identical in tuning units 2, 3, and 4 (fig. 66).
42-mc if. preamplifier.	Parts mounted on wiring side (fig. 70).
42-mc if. amplifier.	Parts mounted on wiring side (fig. 71).
Rf filter FL401.	The bandpass filter (FL401) itself cannot be repaired. Refer to the upper right corner of figure 68 for method of disconnecting right-angle adapters CP401 and CP402 from the input and output terminations. The filter is secured to the framework assembly by two clips.

d. Tuning Unit 4. The major subassemblies within tuning unit 4, working clockwise from the lower left corner of figure 72, consist of the items listed in the chart that follows. Identification of the parts within each subassembly can be determined by referring to the individual illustration of the subassembly. Follow the exploded view illustration for removal and reassembly procedures of a defective subassembly. Before attempting repairs or replacement, refer to the caution in *b* above.

Subassembly	Detailed identification of parts
400-700 mc tuner.	Parts are accessible for repair or replacement by removing top and side covers; interior view (fig. 73); physical-electrical layout (fig. 35).
Detector and electrometer assembly A501.	Parts within sealed assembly are not separately replaceable; if sealed unit is defective, proceed as directed in c above, except that multipin plug is symbol P515, mating jack is A501J2, coaxial jack is A501J1, and mating coaxial plug is P514 (fig. 72) at output end of if. amplifier.
If. step attenuator AT501.	Parts mounted within this subassembly are identical in tuning units 2, 3, and 4 (fig. 66).
42-mc if. preamplifier.	Parts mounted on wiring side (fig. 75).
42-mc if. amplifier.	Parts mounted on wiring side (fig. 76).
700-1,000 mc rf tuner.	Parts are accessible for repair or replacement by removing top and side covers; interior view (fig. 74); physical-electrical layout (fig. 34).

Section II. ALIGNMENT

81. Test Equipment and Special Tools Required for Alignment

The following chart lists the test equipment and special tools required for aligning Radio Interference Measuring Set AN/URM-85, the associated technical manuals, and the assigned common names. Commercial test equipment is listed where Signal Corps test equipment was not used for making measurements.

Test equipment	Technical manual	Common name
RF Signal Generator Set AN/URM-250 or Signal generator, General Radio Co., type 1001-A standard.	TM 11-5551D ----	Tuning unit 1 signal generator.
Signal Generator TS-497(*)/URR[a] ----------	TM 11-5030A ----	Tuning unit (2 or 3) signal generator.
Signal Generator AN/URM-49A or Signal generator, Measurements Corp., model 84 standard.	TM 11-6625-280-15	Tuning unit 4 signal generator.
Voltmeter, Meter ME-30(*)/U[b] ----------	TM 11-6625-320-12	Ac vtvm.
Crystal Rectifier Test Set TS-268(*)/U[c] ----------	TM 11-1242 ------	Crystal diode tester.
Multimeter TS-352(*)/U[d] ----------	TM 11-5527 ------	Multimeter.
Multimeter ME-26B/U or Senior volt-Ohmyst, RCA, model WV-98A.	TM 11-6625-200-12	Dc vtvm.
Uhf Wavemeter, General Radio Co., model 1140-A	----------	Tuning unit 4 wavemeter.
Adapter, Industrial Products Co., type 47250 -----	----------	Type 47250 adapter.
Adapter UG-201A/U.		
Radio Frequency Cable RG-55/U.		
Fabricated cable assembly.		
Radio Frequency Plug UG-88/U.		
Connector, Industrial Products Co., MB series, type 45000.	----------	Mb-series type 45000 connector.
Tuning Wand, General Cement Co., Part No. GC-8278 (6 in. lg by 7/32 in. shaft dia).	----------	Tuning wand.
Soldering aid tool, General Cement Co., Part No. 9093.	----------	Soldering aid tool.

[a] Indicates Signal Generators TS-497A/URR, TS-497B/URR, and TS-497C/URR.

[b] Indicates Voltmeter Meters ME-30/U, ME-30B/U, and ME-30C/U.

[c] Indicates Crystal Rectifier Test Sets TS-268A/U, TS-268B/U, TS-268C/U, and TS-268D/U.

[d] Indicates Multimeters TS-352/U, TS-352A/U, and TS-352B/U.

82. Characteristics and Use of Laboratory Test Equipment, and Special Tools Required for Alignment

The type of laboratory test equipment and the special tools required for alignment of the various tuning units are indicated in *a* through *k* below.

a. Tuning Unit 1 Signal Generator. A cw signal generator is required that can produce output within the frequency range from 150 kc to 30 mc at an accuracy of ±1 percent. An output voltage from 0.05 microvolt to 100 millivolts must be available. The output impedance at the attenuator jack must be 50 ohms. This impedance is obtained when the type 1000-P2 40-ohm series unit (supplied with this signal generator) is inserted into the attenuator output jack.

b. Tuning Unit 4 Signal Generator. A cw signal generator is required that can produce output within the frequency range from 400 to 1,000 mc at an accuracy of ±0.5 percent. An output voltage must be available which is continuously variable from 0.1 microvolt to approximately 1 volt, across a 50 ohm load.

c. Tuning Unit 4 Wavemeter. A wavemeter is required for checking the operating frequency of the rf amplifier and oscillator in the 700-1,000-mc band of tuning unit 4. This wavemeter covers the frequency range from 250 to 1,250 mc and is accurate to within ±2 percent of its dial frequency.

d. Dc Vtvm. This is a vacuum tube voltmeter (vtvm) capable of measuring ac and dc voltages from 0 to 1,500 volts and resistance from 0.2 ohm to 1,000 megohms. It has a dc input resistance of 11 megohms.

e. Type 47250 Adapter. This is an adapter for converting a UG-88/U connector to an md (minature bayonet) Industrial Products Co. type 45000 connector, and is required in aligning tuning unit 1 if. amplifier.

f. UG-201A/U Adapter. This is an adapter for connecting the UG-88/U connector to the N-series SIGNAL INPUT jack on the main unit front panel. It is required in aligning the tuning unit 1 rf tuner.

g. Fabricated Cable Assembly. The fabricated cable assembly consists of a 4-foot length of RG-55/U cable terminated by a UG-88/U connector, BNC-type, and an mb-series type 45000 connector. This cable is used in aligning the tuning unit 2 and 4 if. amplifiers.

h. UG-88/U Plug. This male-type BNC-series connector terminates the RG-55/U coaxial cable.

i. Mb-Series Type 45000 Connector. This female minature bayonet series connector terminates the RG-55/U coaxial cable.

j. Tuning Wand. This is a 6-inch by 7/32-inch tuning wand used for adjusting the coils (tuning unit 2) and variable capacitors (tuning unit 3).

k. Soldering Aid Tool. The soldering aid is used for beiding the split rotor blades of the tuning capacitors during the alignment of the rf sections of tuning units 3 and 4.

83. Filament-Voltage and ±400-Volt Adjustments

Remove the main unit from its instrument case (para 40*b*, item 12, TM 11-6625-351-12) and make the following adjustments in the power supply section of the main unit before proceeding with the alignment.

a. ±420-Volt Adjustment.

(1) Set POLARITY switch S709 at +. This switch is accessible from the top of the main unit adjacent to the voltage regulator assembly (fig. 52).

(2) Connect the positive lead of the multimeter to the top right terminal (1) of toggle switch S709 (fig. 52). Connect the negative lead of the multimeter to chassis ground. Set the multimeter FUNCTION switch to the DIRECT position.

(3) Set the main unit POWER switch at ON.

(4) IMPULSE GEN LEVEL SET control R762 is a dual potentiometer which is mounted directly beneath POLARITY switch S709 (fig. 52) on the partition which separates the power supply from the bottom deck of the main chassis. Vary the

slotted shaft of R762 to obtain an indication of +420 volts dc with reference to ground on the multimeter. This step sets the positive voltage that is fed to the impulse generator contact. Remove the multimeter leads after proper indication has been observed.

(5) Set POLARITY switch S709 at -.

(6) Reconnect the multimeter as directed in procedure (2) above, with the FUNCTION switch set to the REV. position.

(7) Observe the multimeter for an indication of -420 volts with reference to chassis ground. If the amplitude is not the same as that obtained in procedure (4) above, vary the shaft of R762 to obtain the smallest difference in amplitude between the positive and the negative voltages in each of the two positions of S709. After satisfactory adjustment, remove the multimeter leads.

(8) Use the following chart to check the potentials present on the terminals of POLARITY switch S709.

S709 Terminal	Voltage with S709 in + position	Voltage with S709 in - position
1	+420	-420
2	-120	-120
3	+420	-120
4	+120	-420
5	+120	+120
6	+420	-420

b. Filament-Voltage Balance Adjustment (fig. 55).

(1) Set the ac vtvm to the 110-volt scale. Connect one lead to chassis ground and the other alternately to terminals 14 and 16 of transformer T702.

(2) R706 is a variable resistor which is connected across the heater pins of audio amplifier V701. The arm of this variable resistor is accessible from the top of the main unit chassis. Adjust R706 so that the voltage from terminal 14 of T702 to ground is equal to the voltage from terminal 16 of T702 to ground. After proper adjustment is obtained, disconnect the leads of the ac vtvm from the transformer terminals.

c. Electrometer Filament-Voltage Adjustment.

Caution: **If these adjustments are not made properly, the electrometer circuit may become damaged.**

(1) Set the dc vtvm to the 3-volt scale.

(2) Turn the ELECT. V3 ADJ control (fig. 51) fully clockwise.

(3) Connect the leads of the dc vtvm across terminals 8 and 10 on the filter box at the rear of the main unit (fig. 45 and 51). Be sure to connect the positive voltmeter lead to terminal 8, and the negative lead to terminal 10.

(4) Adjust the ELECT. V3 ADJ control for a 1.2-volt indication on the dc vtvm.

(5) Turn the ELECT. V4 ADJ control fully clockwise and move the dc vtvm leads to terminals 11 and 9 on the filter box. Be sure to connect the positive voltmeter lead to terminal 11, and the negative lead to terminal 9. Adjust the ELECT. V4 ADJ control for a 1.2-volt indication on the dc vtvm.

84. If. Amplifier Alignment, Tuning Unit 1, General

a. To align a tuning unit, remove its dust cover. Use the test harness (fig. 46) to interconnect the tuning unit to the main unit. Tuning unit 1 uses two separate if. amplifier subassemblies; one is tuned to a center frequency of 455 kc, and the other is tuned to 1,600 kc. All if. transformers are tuned by means of movable iron cores. For ease of setting, the tuning adjustments are terminated with an integral 1/4-inch hexagonal nut. The use of a plastic alignment tool (6-8 inches long) will prevent capacitance effects during alignment. The following chart indicates which if. transformers require tuning only from the top of the if. chassis, and which require tuning of the cores from both the top and bottom of the if. chassis.

If. amplifier subassembly	Single-tuned transformer, adjusted from top of if. chassis	Double-tuned transformer: primary adjusted from top; secondary adjusted from bottom of if. chassis
455 kc	T29	T31 T32 T33
1,600 kc	T24	T25 T26 T27

Note: Transformer T34 is a single-tuned transformer adjusted from the bottom of the 455-kc if. chassis. Transformer T28 is a single-tuned transformer adjusted from the bottom of the 1,600 kc if. chassis.

b. Allow the tuning unit, the main unit, and the tuning unit 1 signal generator to warm up for at least 1/2 hour before starting alignment.

c. Set the front panel controls as follows:

Control	Setting
Function switch	CW AVERAGE.
SIGNAL ATTENUATOR DB switch	20.
MEGACYCLES band switch	1 (.15-.36) or 3 (.87-2.1).
Calibration switch	SERIES CAL & OPERATE.
IMPULSE GENERATOR DB ABOVE 1μV/MC switch.	OFF.
POWER switch	ON.
GAIN control	Midposition.

85. Alignment of 455-Kc If. Amplifier (fig. 56)

a. Rotating the band switch to band 1 or 3 energizes the 455-kc if. amplifier and removes operating power from the 1,600-kc if. amplifier. Set the frequency dial of the tuning unit 1 signal generator (such as signal generator, General Radio Co., type 1001-A standard) to 455 kc. Apply the unmodulated output of the tuning unit 1 signal generator to the input of the if. amplifier as follows:

(1) Terminate the attenuator output jack of the tuning unit 1 signal generator with the type 1000-P2 40-ohm series unit, which is an accessory supplied with the tuning unit 1 signal generator.

(2) Connect the type 874-R22 coaxial cable (an accessory of the tuning unit 1 signal generator) to the 40-ohm termination series unit. The output end of this coaxial cable is a BNC-type UG-88/U connector (male).

(3) Since many jacks and plugs within the tuning unit are mb-type miniature coaxial connectors, a type 47250 adapter (para 81) is required for interconnecting the output of the tuning unit 1 signal generator to input connector P4 of the if. amplifier.

(4) Disconnect plug P4 (fig. 56 and 60) from jack J3 on the if. step attenuator.

(5) Connect plug P4 to the type 47250 adapter. This step completes the procedure for injecting the 455-kc output of the tuning unit 1 signal generator to the input of the if. amplifier.

b. Vary the output control of the tuning unit 1 signal generator so that an onscale indication can be seen on the DECIBELS-MICROVOLTS (panel meter) of the main unit.

Note: As tuning unit 1 is brought into alignment, decrease the tuning unit 1 signal generator output and the tuning unit GAIN control (if necessary) so that the pointer on the panel meter maintains an onscale indication.

c. Reference to figure 56 shows that the 455-kc if. amplifier is mounted within the tuning unit in an inverted position. Adjust the variable cores of T31, T32, T33, and T34, in this sequence, for a maximum output indication on the panel meter.

d. Adjust the variable cores at the tops of T29, T31, T32, and T33, in this sequence, for maximum output.

e. Repeat the procedures given in *c* and *d* above for final peak adjustments.

f. Disconnect plug P4 from the type 47250 adapter and reconnect P4 to jack J3 on the if. step attenuator.

86. Alignment of 1,600-Kc If. Amplifier

a. Rotating the band switch to bands 2, 4, 5, or 6 energizes the 1,600-kc if. amplifier and removes operating power from the 455-kc if. amplifier. The test setup is similar to that described in para 85 except for setting the frequency dial of the signal generator to 1,600 kc.

b. Disconnect plug P3, which is the input plug to the 1,600-kc if. amplifier, from jack J2 on the if. step attenuator (fig. 56 and 60).

c. Connect plug P3 to the type 47250 adapter at the output end of the tuning unit 1 signal generator coaxial cable. This step applies the output of the tuning unit 1 signal generator to the input of the 1,600-kc if. amplifier.

d. Rotate the tuning unit GAIN control to midposition.

e. Vary the output control of the tuning unit 1 signal generator so that an onscale indication can be seen on the panel meter of the main unit.

f. Reference to figure 56 shows that the 1,600-kc if. amplifier is mounted in an upright position on the tuning unit. Invert the tuning unit. Adjust the variable cores at the bottom of if. transformers T25, T26, T27, and T28, in this sequence, to obtain a maximum indication on the front-panel meter.

g. Place the tuning unit in its upright position. Adjust the variable cores at the tops of if. transformers T24 through T27, in this sequence, to obtain maximum output.

h. Repeat the procedures given in *f* and *g* above for final peak adjustments.

i. Disconnect plug P3 from the type 47250 and reconnect P3 to jack J2 on the if. step attenuator.

87. Alignment of Rf Tuner Section, Tuning Unit 1 (fig. 56)

a. To align the rf tuner, the tuning unit must be operated outside of the main unit. Use the test harness (fig. 46). Each band of tuning unit 1 requires separate adjustments. The adjustable elements are mounted on the cylindrical phenolic tuner segments, Z1 through Z6 (fig. 58). Access to the tuning adjustments is obtained by inverting the tuning unit so that the three subminiature electron tubes, V1 through V3, are facing the repairman. Six access holes are located adjacent to the three electron tubes. Use phenolic alignment tools to adjust the variable coils and trimmer capacitors. The powdered iron cores for the coils are adjusted at the low-frequency end of each band; the ceramic trimmer capacitor is adjusted at the high-frequency end.

b. Inject the unmodulated rf output of the tuning unit 1 signal generator into the front-panel SIGNAL INPUT jack as follows:

(1) Terminate the attenuator output connector on the tuning unit 1 signal generator with the type 1000-P2 40-ohm series unit (supplied as an accessory with the tuning unit 1 signal generator).

(2) Connect the type 874-R22 coaxial cable (supplied as an accessory with the tuning unit 1 signal generator) to the output end of the 40-ohm termination.

(3) Use the UG-201A/U N-series adapter to mate the BNC connector (at the output of the tuning unit 1 signal generator cable) to the N-type SIGNAL INPUT jack on the main unit.

c. Proceed as directed in the following chart.

Step	Tuning unit 1 signal generator output frequency	MEGACYCLES band switch position	Adjustments	Procedure
1	150 kc	.15-.36 (with frequency dial set to 150 kc).	T1, T2, and T4, in this sequence (located on tuner segment Z1 (fig. 58)).	Adjust transformers to obtain maximum pointer deflection on main unit panel-mounted meter. If panel meter pointer deflects so far to right that changes in output cannot be observed, decrease output settings of tuning unit 1 signal generator and tuning unit 1 GAIN control.

Step	Tuning unit 1 signal generator output frequency	MEGACYCLES band switch position	Adjustments	Procedure
2	455 kc	.15-.36 (with frequency dial set to 150 kc).	T22 (located on if. input selector sub-assembly).	Increase output from tuning unit 1 signal generator considerably so that increase in panel meter indication is observed. Set output of tuning unit 1 signal generator so that panel meter pointer rests at approximately mid-scale; then adjust variable core of T22 for maximum output indication.
3	360 kc	.15-.36 (with frequency dial set to 360 kc).	C2, C4, and C8, in this sequence (located on tuner segment Z1 (fig. 58)).	Adjust three trimmer capacitors to obtain maximum indication on main unit panel meter.
4	150 kc	.15-.36 (with frequency dial set to 150 kc).	T1, T2, and T4 ------	Repeat step 1 above to obtain peak panel meter indication.
5	360 kc	.15-.36 (with frequency dial set to 360 kc).	C2, C4 and C8 -------	Repeat step 3 above to obtain peak panel meter indication and to assure that low and high ends of band are accurately aligned.
6	360 kc	.36-.87 (with frequency dial set to 360 kc).	T5, T6, and T7, in this sequence (located on tuner segment Z2 (fig. 58)).	Adjust transformers to obtain maximum pointer deflection on main unit panel meter. If panel meter pointer deflects so far to right that changes in output cannot be observed, decrease output settings of tuning unit 1 signal generator and tuning unit 1 GAIN control.
7	1,600 kc	.36-.87 (with frequency dial set to 360 kc).	T23 (located on if. input selector sub-assembly).	Increase output considerably from tuning unit 1 signal generator so that increase in panel meter indication is observed. Set tuning unit 1 signal generator output so that panel meter pointer rests at approximately mid-scale; then adjust variable core of if. transformer T23 for maximum output indication.
8	870 kc	.36-.87 (with frequency dial set to 870 kc).	C12, C14, and C17, in this sequence (located on tuner segment Z2 (fig. 58)).	Adjust three trimmer capacitors to obtain maximum indication on main unit panel meter.
9	360 kc	.36-.87 (with frequency dial set to 360 kc).	T5, T6, and T7 ------	Repeat step 7 above to obtain peak indication.
10	870 kc	.36-.87 (with frequency dial set to 870 kc).	C12, C14, and C17----	Repeat step 8 above to obtain peak indication and to assure that low and high ends of band are accurately aligned.
11	870 kc	.87-2.1 (with frequency dial set to 870 kc).	T8, T9, and T11, in this sequence (located on tuner segment Z3 (fig. 58)).	Adjust transformers to obtain maximum pointer deflection on main unit panel meter. If meter pointer deflects so far to right that changes in output cannot be observed, decrease output of tuning unit 1 signal generator.

Step	Tuning unit 1 signal generator output frequency	MEGACYCLES band switch position	Adjustments	Procedure
12	2.1 mc	.87-2.1 (with frequency dial set to 2.1 mc).	C20, C22, and C25 in this sequence (located on tuner segment Z3).	Adjust three trimmer capacitors to obtain maximum indication on main unit panel meter.
13	870 kc	.87-2.1 (with frequency dial set to 870 kc).	T8, T9, and T11------	Repeat step 11 above to obtain peak panel meter indication.
14	2.1 mc	.87-2.1 (with frequency dial set to 2.1 mc).	C20, C22, and C25 ---	Repeat step 12 above to obtain peak panel meter indication and to assure that low and high ends of band are accurately aligned.
15	2.1 mc	2.1-5.2 (with frequency dial set to 2.1 mc).	T12, T13, and T14, in this sequence (located on tuner segment Z4 (fig. 58)).	Adjust transformers to obtain maximum pointer deflection on main unit panel meter. If panel meter pointer deflects so far to right that changes in output cannot be observed, decrease output of tuning unit 1 signal generator.
16	1,600 kc	2.1-5.2 (with frequency dial set to 2.1 mc).	L1 (located on rf tuner chassis, near tube V1).	Increase output level from tuning unit 1 signal generator to obtain panel meter indication at approximately midscale. Adjust core of L1, which is part of 1,600-kc trap circuit, to obtain dip in meter indication. Lock L1 shaft at setting which produces greatest dip.
17	5.2 mc	2.1-5.2 (with frequency dial set to 5.2 mc).	C28, C31, and C32 in this sequence (located on rf tuner segment Z4 (fig. 58)).	Adjust three trimmer capacitors to obtain maximum indication on main unit panel meter.
18	2.1 mc	2.1-5.2 (with frequency dial set to 2.1 mc).	T12, T13, and T4 ----	Repeat step 15 above to obtain peak panel meter indication.
19	5.2 mc	2.1-5.2 (with frequency dial set to 5.2 mc).	C28, C31, and C32 ---	Repeat step 17 above to obtain peak panel meter indication and to assure that low and high ends of band are accurately aligned.
20	5.2 mc	5.2-12.7 (with frequency dial set to 5.2 mc).	T15, T16, and T17, in this sequence (located on rf tuner segment Z5 (fig. 58)).	Adjust transformers to obtain maximum pointer deflection on main unit panel meter. If meter pointer deflects so far to right that changes in output cannot be observed, decrease output of tuning unit 1 signal generator.
21	12.7 mc	5.2-12.7 (with frequency dial set to 12.7 mc).	C36, C38, and C41, in this sequence (located on rf tuner segment Z5).	Adjust three trimmer capacitors to obtain maximum indication on main unit panel meter.
22	5.2 mc	5.2-12.7 (with frequency dial set to 5.2 mc).	T15, T16, and T17 ---	Repeat step 20 above to obtain peak panel meter indication.
23	12.7 mc	5.2-12.7 (with frequency dial set to 12.7 mc).	C36, C38, and C41 ---	Repeat step 21 above to obtain peak panel meter indication and assure that low and high ends of band are accurately aligned.
24	12.7 mc	12.7-30 (with frequency dial set to 12.7 mc).	T18, T19, and T21, in this sequence (lo-	Adjust transformers to obtain maximum pointer deflection

Step	Tuning unit 1 signal generator output frequency	MEGACYCLES band switch position	Adjustments	Procedure
			cated on tuner segment Z6 (fig. 58)).	on main unit mounted meter. If meter pointer deflects so far to right that changes in output cannot be observed, decrease output of tuning unit 1 signal generator.
25	30 mc	12.7-30 (with frequency dial set to 30 mc).	C44, C46, and C49, in this sequence (located on tuner segment Z6).	Adjust three trimmer capacitors to obtain maximum indication on main unit panel meter.
26	12.7 mc	12.7-30 (with frequency dial set to 12.7 mc).	T18, T19, and T21 ---	Repeat step 24 above to obtain peak panel meter indication.
27	30 mc	12.7-30 (with frequency dial set to 30 mc).	C44, C46, and C49 ---	Repeat step 25 above to obtain peak panel meter indication and assure that low and high ends of band are accurately aligned.

88. If. Amplifier Alignment, Tuning Unit 2, General

a. To align tuning unit 2, remove the main unit from its instrument case (para 40 , item 12, TM 11-6625-351-12), and remove tuning unit 2 from its dust cover. Use the test harness to interconnect tuning unit 2 to the main unit (fig. 46). Tuning unit 2 employs only one if. amplifier, tuned to a center frequency of 10.7 mc. Similar to tuning unit 1 (para 84) all if. transformers are tuned by means of movable iron cores which are terminated in hexagonal nuts. The following chart indicates the location of the if. alignment adjustments:

Single-tuned network, adjusted from top of if. amplifier chassis	Double-tuned network: primary adjusted from top of if. chassis; secondary adjusted from bottom of if. chassis
T205	T206
Z201	T207
Z202	
L229	

b. Allow tuning unit 2, the main unit, and tuning unit 2 signal generator to warm up for at least 1/2 hour before starting the alignment.

c. Set the front-panel controls as follows:

Control	Setting
Function switch ----------	CW AVERAGE.
SIGNAL ATTENUATOR DB switch	20.
FREQUENCY RANGE-MC switch--	20-70 MC.
Calibration switch ----------	SERIES CAL & OPERATE.
IMPULSE GENERATOR DB ABOVE 1μV/MC switch.	OFF.
GAIN control ----------	Midposition.
POWER switch ----------	ON.

89. Alignment of 10.7-Mc If. Amplifier (fig. 64)

a. Rotating the FREQUENCY RANGE-MC switch to the 20-70-mc position energizes the 20-70-mc tuner and removes operating power from the 70-220-mc tuner. Operating power is applied to the if. amplifier in both positions of the band switch. Set the frequency dial of the tuning unit 2 signal generator to 10.7 mc. Apply the output of the tuning unit 2 signal generator to the input of the if. amplifier as indicated in the test setup (fig. 91).

(1) Connect Cord CG-55B/U, supplied with the tuning unit 2 signal generator, to the front-panel CARRIER OUTPUT jack of the generator. This cord is terminated with a Radio Frequency Plug UG-21B/U at each end.

(2) Fabricate a cable assembly; use a 4-foot length of RG-55/U coaxial cable. Terminate the tuning unit 2 signal generator end of the cable

with a UG-88/U connector (BNC-series). Terminate the tuning unit end of the cable with an MB-series type 45000 female connector.

(3) Use a UG-201A/U adapter to interconnect one termination on the tuning unit 2 signal generator cable to the UG-88/U connector on the fabricated cable assembly described in (2) above.

(4) Disconnect plug P209 on the tuning unit 2 cable assembly W201, from jack J1 (AT201J1) on the if. step attenuator.

(5) Connect the output of the tuning unit 2 signal generator, through the fabricated cable assembly ((2) above), to jack J1 (AT201J1) on the if. step attenuator.

Note: Throughout the following alignment procedure, decrease the tuning unit 2 signal generator MICROVOLTS output control and the tuning unit GAIN control (if necessary) so that the pointer on the main unit panel meter maintains an on-scale indication. Initially set the tuning unit 2 signal generator MICROVOLTS dial to a value of 20K (equivalent to -20 decibels (referred to 1 milliwatt in 600 ohms) (dbm)); then reduce the output setting as required to keep the panel meter pointer indication lower than full scale.

b. Working from the top of the 10.7-mc if. amplifier subassembly, adjust networks T205, T206, T207, Z201, and Z202, in this sequence, for maximum output indication. Gradually decrease the tuning unit 2 signal generator output control setting as tuning unit 2 is brought into alignment, to prevent overloading of the if. amplifier.

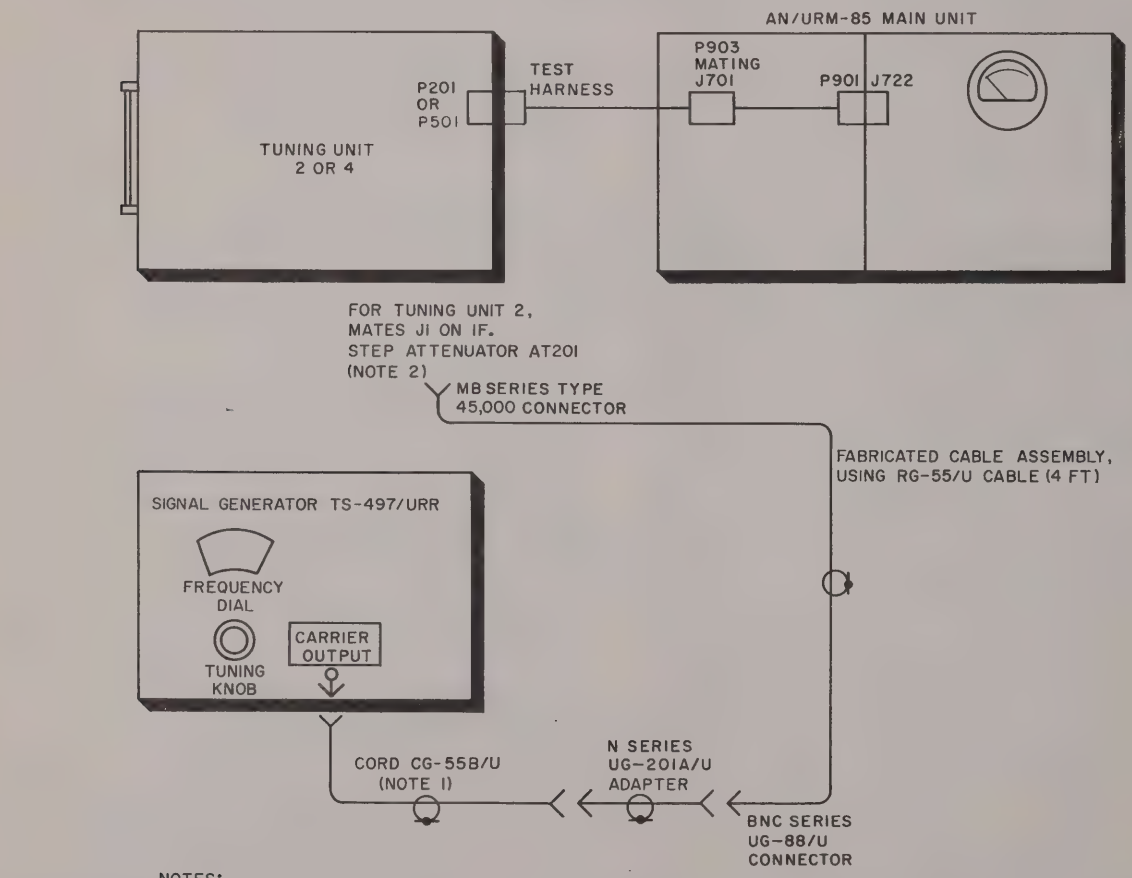

NOTES:

1. PART OF SIGNAL GENERATOR TS-497/URR.
2. FOR TUNING UNIT 4, MATE MB SERIES TYPE 45,000 CONNECTOR TO JACK J509, ON THE 42 MC IF. PREAMPLIFIER.

TM6625-351-35-96

Figure 91. Test setup for if. amplifier alignment, tuning units 2 and 4.

c. Working from the bottom of the 10.7-mc if. amplifier subassembly, adjust the cores of if. transformers T206 and T207 for a further maximum indication on the panel meter.

d. Repeat the procedures given in *b* and *c* above, as necessary, until no further peaking can be observed. Proper if. alignment is evidenced when an output of approximately 40 to 70 microvolts from the tuning unit 2 signal generator produces a full-scale pointer deflection on the panel meter (with the SIGNAL ATTENUATOR DB switch at the 20 db position).

e. After completing the procedures given in *a* through *d* above, adjust signal peaking coil L229 in the cathode circuit of V211, as follows:

(1) IF. CATHODE FOLLOWER ADJ switch S704 is mounted on the main unit power supply partition (fig. 51). Set this toggle switch to the open-circuit position to place a resistor in the metering signal path and make the panel meter (M701) less sensitive.

(2) Observe that the meter pointer now deflects to approximate midscale, with the tuning unit 2 signal generator injecting a 50-microvolt output signal (at 10.7 mc) into the if. amplifier.

(3) Rotate the tuning unit 2 signal generator MICROVOLTS control to obtain the full-power level capability (approximately 100,000 microvolts), and adjust the core of L229 for a maximum output indication on the panel meter.

(4) Set switch S704 to its closed-circuit position. This action short-circuits the series resistor in the metering signal path and causes the panel meter to be more sensitive.

(5) Decrease the tuning unit 2 signal generator MICROVOLTS control to the setting that produces approximate midscale panel meter reading.

(6) Readjust Z202 to obtain a maximum panel meter indication.

(7) Repeat the procedures given in (1) through (6) above for final peak panel meter indication. This procedure completes the alignment of the 10.7-mc if. amplifier.

f. Disconnect the fabricated cable assembly (*a*(2) above) from input jack J1 on the if. step attenuator. Reconnect plug P209 on cable assembly W201 to input jack J1 on the if. step attenuator.

90. Using Tuning Wand

A tuning wand is required for aligning the 70-200-mc band of tuning unit 2 and for the complete frequency range of tuning unit 3. This tuning wand, which is commercially available, consists of a plexiglas rod approximately 7/32 inch in diameter by 6 inches long. One end of the wand terminates in a powdered iron core slug; the other end terminates in a brass slug. Use the wand as described below:

a. Tuning Unit 2 (70- to 220-Mc Band (fig. 65)).

(1) Insert the brass slug end of the tuning wand into the separate magnetic field of variable coils L208 at the input to V204, L211 at the input to V205, and L213 at the input to V206A. Watch the change in indication on the main unit panel meter. An increase in the meter indication shows that the coupling between the individual loops of wire comprising the particular coil under measurement should be *reduced.* This effect is obtained by *spreading* the loops of wire farther apart from each other.

(2) Insert the powdered iron core end of the tuning wand into the same variable coils, one coil at a time. Watch the change in panel meter indication. An increase in the panel meter indication with the powdered iron core inserted in the magnetic field of the coil now shows that the coupling between the loops of wire should be *increased.* This effect is obtained by *bending* the loops closer to each other.

b. Tuning Unit 3 (200 to 400 Mc (fig. 69)).

(1) Insert the brass slug end of the

tuning wand into the magnetic field of the coupling loops such as the field created by rf energy in the vicinity of L401-L402, or L404-L405. Observe the change in meter indication. An increase in the meter indication shows the need for *reducing* the coupling between the pickup loops. This effect is obtained by *farther spacing* between the primary and the secondary loops.

(2) Insert the powdered iron core end of the wand into the magnetic field surrounding the pickup loops under measurement, and observe the change in meter indication. An increase in meter indication now shows the need for *increasing* the coupling between the pickup loops. This effect is obtained by *closer spacing* between the primary and secondary loops.

91. Alignment of Rf Tuner Section, Tuning Unit 2 (fig. 64 and 65)

Warning: **Various inductances in the rf tuner section of tuning unit 2 (fig. 65) require squeezing or spreading turns of uninsulated wire. *Never* touch these inductances with the bare fingers while operating power is applied, since B+ potentials of 105 volts and 150 volts are present. *Always* use a well-insulated pair of pliers or similar tool for squeezing or spreading the turns of wire. Also be careful to avoid short-circuiting one turn of wire to another.**

a. Align the rf tuner while tuning unit 2 is operating outside the main unit. Use the test harness (fig. 46), with the front panel control set to the positions listed in paragraph 88.

b. Remove the cover from the exterior side of the rf tuner (fig. 64).

c. Connect the output of the tuning unit 2 signal generator, through Cord CG-55B/U supplied with the signal generator, to the main unit front panel SIGNAL INPUT jack. Proceed as directed in the following chart:

Step	Tuning unit 2 signal generator output frequency	FREQUENCY RANGE-MC switch position	Adjustment	Procedure
1	20 mc	20-70 mc (with frequency dial set to 20 mc).	Oscillator trimmer C226	Use insulated alignment tool with tip (metal, if necessary) approximately 1/8 inch wide or less to vary setting of capacitor for maximum output indication on main unit panel meter.
2	20 mc	20-70 mc (with frequency dial set to 20 mc).	Amplifier trimmers C218, C211, and C203, in this sequence.	Adjust for peak indication on panel meter; reduce output from tuning unit 2 signal generator as rf tuner is brought into alignment.
3	70 mc	20-70 mc (with frequency dial set to 70 mc).	Oscillator inductors L205 and L206.	Use insulated alignment tool to rotate core of L206 fully counterclockwise (fig. 65); then rotate core, 5 complete revolutions clockwise. No further adjustment is required for L205. Adjust L206 to obtain maximum indication on main unit panel meter.
4	70 mc	20-70 mc (with frequency dial set to 70 mc).	Amplifier inductors L204, L203, and L202, in this sequence.	Adjust each inductor to obtain peak panel meter indications.
5	20 mc	20-70 mc (with frequency dial set to 20 mc).	Mixer transformer T202	Adjust for peak indication on panel meter.

Step	Tuning unit 2 signal generator output frequency	FREQUENCY RANGE-MC switch position	Adjustment	Procedure
6	Not in use	See step 7 below --------	See step 7 ----------	Perform overall sensitivity test of 20-70-mc band; use broadband output of impulse generator instead of tuning unit 2 signal generator. Change front-panel controls as follows: IMPULSE GENERATOR DB ABOVE 1 μV/MC --- ON Calibration switch — SHUNT CAL. Function switch — CW Peak. Impulse generator output controls — Total of 60 db. GAIN control — Set to obtain full-scale panel meter pointer indication.
7	Not in use	20-70 mc (slowly rotate frequency dial over 20- to 45-mc portion of spectrum).	Mixer trimmer C218 and and amplifier trimmer C211.	While scanning over this portion of spectrum, observe panel meter indication for dips. Note frequency at which dips occur. Carefully adjust trimmer capacitors to minimize low output indications at noted frequencies.
8	Not in use	20-70 mc (slowly rotate frequency dial over 45- to 70-mc portion of spectrum).	Mixer inductor L204 and amplifier inductor L203.	Same as step 7 above except for adjusting L204 and L203.
9	Not in use	20-70 mc (slowly scan frequency dial over entire frequency range).	C218, C211, L204, and L203.	Peak these adjustment controls to obtain peak equipment performance. On-scale panel meter pointer deflection (not necessarily full-scale deflection) throughout frequency range indicates satisfactory alignment. For absolute peak performance, obtain same highest panel meter indication throughout range as was observed at most sensitive frequency settings.
10	Not in use	----------	None ----------	Deenergize self-contained impulse generator by resetting front-panel controls as listed in paragraph 88 .
11	70 mc	70-220 mc (with frequency dial set to 70 mc).	Oscillator trimmer C249	Same as step 1 above.
12	70 mc	70-220 mc (with frequency dial set to 70 mc).	Amplifier trimmers C243, C236, and C231, in this sequence.	Same as step 2 above.
13	220 mc	70-220 mc (with frequency dial set to 200 mc).	Oscillator inductor L215	If further alignment is required after completing step 11 above, turn off operating power from test set and use pair of insulated pliers to squeeze or spread inductance turns of wire. Use tun-

Step	Tuning unit 2 signal generator output frequency	FREQUENCY RANGE-MC switch position	Adjustment	Procedure
				ing wand (para 90) to determine whether close or loose coupling of loops of wire comprising coil is required. Reapply operating power to test set and observe panel meter to see that squeezing or spreading turns has increased panel meter output indication.
14	220 mc	70-220 mc (with frequency dial set to 200 mc).	Amplifier end inductors L213, L211, and L208.	Same as step 13 above.
15	70 mc	70-220 mc (with frequency dial set to 70 mc).	Mixer transformer T204	Adjust for peak indication on panel meter.
16	Not in use	See step 17 below --------	See step 17 ----------	Perform overall sensitivity test of the 70-220-mc band; use broadband output of impulse generator instead of signal generator. Change front-panel controls to settings listed in step 5 above.
17	Not in use	70-220 mc. (Slowly rotate frequency dial over 70- to 145-mc portion of spectrum.)	Mixer trimmer C243 and amplifier trimmer C236.	Same as step 7 above.
18	Not in use	70-220 mc. (Slowly rotate frequency dial over 145- to 220-mc portion of spectrum.)	Mixer inductor L213 and amplifier inductor L211.	Same as step 7 above except for adjusting L213 and L211.
19	Not in use	70-220 mc. (Slowly scan frequency dial over entire frequency range.)	C243, C236, L213, and L211.	Same as step 9 above.

92. If. Amplifier Alignment, Tuning Unit 3, General

a. Tuning unit 3 differs from tuning units 1 and 2 in that it has two if. amplifier subassemblies. One subassembly contains the third through sixth if. amplifiers and an if. cathode follower; the other contains a cascode driver-amplifier stage and the first two stages of if. amplification. To align these subassemblies, remove the main unit from its instrument case (para 40*b*, item 12, TM 11-6625-351-12). Remove the dust cover from tuning unit 3 and interconnect tuning unit 3 to the main unit with the test harness (fig. 46).

b. Inject the unmodulated output of the tuning unit 3 signal generator into the if. preamplifier as follows:

(1) Connect one end of Cord CG-55B/U, supplied with the tuning unit 3 signal generator, into the generator front-panel CARRIER OUTPUT jack.

(2) Disconnect plug P407 on tuning unit cable assembly W402 from its mating jack J406 on the top side of the tuner subassembly (fig. 58). Plug P407 is a UG-88/U connector (BNC-series) and is located adjacent to the worm gear on the rf tuner.

(3) Use a UG-201A/U adapter to interconnect the output end of Cord CG-55B/U to P407, at the input of the if. preamplifier.

c. As in tuning units 1 and 2, the cores of the tuned networks on the if. preamplifier and amplifier subassemblies are provided with hexagonal nuts. Use the same plastic alignment tool for adjusting the 1/4-inch hexagonal nuts on this tuning unit as was used for the previous tuning units. The locations of the adjustment controls are listed in the following chart:

Subassembly	Single-tuned networks, adjustable from top of subassembly	Double-tuned networks: primary adjustable from top of subassembly; secondary adjustable from bottom of subassembly
42-mc if. amplifier	L431 Z403 T405	T408 T407 T406
42-mc if. preamplifier	T404 Z402 Z401 T401	None

Note: If. transformer T404 on the if. preamplifier is aligned after the rf tuner has been aligned.

d. Set the front-panel controls on the test set as listed in paragraph 88c except for the FREQUENCY RANGE MC switch. Tuning unit 3 has no band switch.

93. Alignment of 42-Mc If. Amplifiers

a. Set the frequency dial of the tuning unit 3 signal generator to 42 mc and inject the output signal into if. preamplifier cable assembly W402.

b. Set the MICROVOLTS control of the tuning unit 3 signal generator to produce an approximate midscale reading on the main unit panel meter.

c. The 42-mc if. amplifier subassembly is mounted in a horizontal position at the top of tuning unit 3. Working from the electron tube side of the 42-mc if. amplifier subassembly, adjust the cores of networks Z403, T408, T407, T406, and T405, in this sequence, to obtain a maximum panel meter indication. As the 42-mc if. amplifier is brought into alignment, decrease the MICROVOLTS control setting on the tuning unit 3 signal generator and the GAIN control setting (if necessary) on the front panel to maintain an onscale panel meter indication.

d. Working from the tube socket side of 42-mc if. amplifier subassembly, adjust the cores of networks T408, T407, and T406 to obtain a further peak indication on the panel meter.

Note: If the 42-mc if. amplifier cannot be aligned with the tuning unit 3 signal generator connected to preamplifier cable assembly W402, connect the tuning unit 3 signal generator to cable assembly W403 (connector P409) and repeat the procedures given in *b*, *c*, and *d* above.

e. The 42-mc if. preamplifier subassembly is also mounted at the top of tuning unit 3, with the electron tubes in an inverted position. Work from the electron tube side of this subassembly and adjust the cores of networks Z402, Z401, and T401 to obtain a maximum panel meter indication.

f. After completing the procedures given in *a* through *e* above, align signal peaking coil L431, in if. cathode follower stage V410, as follows:

(1) Set IF. CATHODE FOLLOWER ADJ switch S704 on the main unit power supply partition (fig. 51) to the open-circuited position.

(2) Observe that the panel meter pointer deflects to approximate midscale, with the tuning unit 3 signal generator injecting a 12-microvolt output signal (at 42 mc) into the 42-mc if. amplifier.

(3) Rotate the tuning unit 3 signal generator MICROVOLTS control to obtain the full-power level capability from the signal generator. Adjust the core of L431 (fig. 71) for a maximum output indication on the panel meter.

(4) Set switch S704 to its closed-circuit position and see that the panel meter pointer indicates a full-scale reading.

(5) Repeat the procedures given in (1) through (4) above to assure that a 12-microvolt output from the tuning unit 3 signal generator produces a full-scale panel meter indication, while the SIGNAL ATTENUATOR DB switch on the main unit front panel set to the 20-db position.

g. After meeting the requirement in *f* above, disconnect the output of the tuning unit 3 signal generator from plug P407 on cable assembly W402. Reconnect P407 to its mating jack, J406, at the top of the rf tuner (fig. 58). This procedure enables the output of the rf tuner to pass through the if. amplifier, through the detector and electrometer assembly, and to the metering circuit in the main unit.

94. Alignment of Rf Tuner Section, Tuning Unit 3 (fig. 69)

Warning: **Short lengths of uninsulated metal strapping are used as rf inductors in the tuning unit 3 rf tuner because of the ultra-high frequencies employed. *Never* touch the inductors with the bare fingers while the operating power is applied. Always use a well-insulated pair of pliers or an insulated screwdriver in making adjustments within the rf tuner. Remove the operating power *before* making an adjustment. Change the position of an inductor, and then reapply operating power *after* the adjustment has been made, in order to avoid shock hazard to maintenance personnel.**

a. Align the rf tuner while tuning unit 3 is operating outside of the main unit and the main unit removed from its instrument case (para 40*b*, item 12, TM 11-6625-351-12). Use the test harness (fig. 46). Set the front-panel controls to the positions listed in paragraph 88*c*, except for the FREQUENCY-RANGE MC switch. Tuning unit 3 has no bandswitch.

b. Remove the two access covers from the left and right sides of the rf tuner (fig. 68).

c. Inject the output of the tuning unit 3 signal generator to the main unit front-panel SIGNAL INPUT jack; use Cord CG-55B/U supplied with the generator. Proceed as directed in the following chart:

Step	Tuning unit 3 signal generator output frequency	Tuning unit 3 frequency dial setting	Adjustment	Procedure
1	400 mc	400 mc ----------	None ----------	Rock TUNING control in vicinity of its 400-mc setting to obtain maximum indication on main unit panel meter. Set signal generator MICROVOLTS control and tuning unit GAIN control to obtain approximate midscale indication on meter.
2	400 mc	400 mc ----------	Oscillator trimmer C414 (B, fig. 69), accessible from right side of tuner.	Use insulated alignment tool and vary tuning screw to obtain peak indication on panel meter.
3	400 mc	400 mc ----------	If. transformer T401, accessible from top of preamplifier subassembly (fig. 68).	Carefully readjust core to obtain farther peak indication on meter. *Note:* Do not reset any other variable cores in if. preamplifier and if. amplifier subassemblies.
4	400 mc	400 mc ----------	Trimmers C405 and C401 (fig. 69), accessible from right side of tuner.	Adjust both trimmer capacitors to obtain farther maximum indication on panel meter.
5	200 mc	200 mc ----------	Inductor L409 in V402 oscillator circuit (B, fig. 69), accessible from right side of tuner.	Adjust L409 to obtain maximum indication on meter. Perform this adjustment by bending loop of wire farther away or closer to 1/4-inch copper stripping. *Caution:* **Bend wire only small fraction of an inch. Small changes in effective inductance length produce large frequency changes at 200 mc.**
6	200 mc	200 mc ----------	Inductor L404 (B, fig. 69).	Vary spacing between adjustable inductor L404 and large insulated loop L405. Proceed by loosening two hexagonal nuts which secure L404 to frame of tuning capacitor C404; then slide L404 closer or farther

Step	Tuning unit 3 signal generator output frequency	Tuning unit 3 frequency dial setting	Adjustment	Procedure
				away from L405; slots are provided at base of L404 for this purpose. Reposition L404 within its adjustable range and lock this inductor in position that produces highest indication on panel meter.
7	200 mc	200 mc ----------	Mixer inductor L405 ---	*Note:* Perform this step only if increased meter indication could not be obtained by performing step 6 above. Invert tuning unit 3 so that left side of tuner is accessible (A, fig. 69). Observe that two screws are located above and below metal strap that secures crystal mixer CR401 within rf tuner. These two screws secure phenolic supporting block to which large insulated inductor L405 is anchored. Slots are provided in chassis partition for this adjustment. Use tuning wand to determine whether more or less coupling is required. (See paragraph 90 for directions on using tuning wand.) If closer coupling of pickup loop L405 with respect to L404 is required, slide phenolic block toward rear of chassis. (For increasing space between L405 and L404, slide phenolic block toward front of chassis.) For either adjustment, lock phenolic block in position that produces highest indication on panel meter. Final spacing between L404 and L405 will be approximately 3/16 inch.
8	200 mc	200 mc ----------	V401 input loop L402 (B, fig. 69) accessible from right side of tuner.	Adjust L402 for optimum coupling to L401. This is accomplished by loosening two hexagonal nuts which secure pickup loop L402 to frame of tuning capacitor C402. After highest indication is observed on panel meter, lock L402 in this position by tightening two hexagonal nuts to frame of C402. Final spacing between L401 and L402 will be approximately 3/16 inch.
9	400 mc	400 mc ----------	C414, T401, C405, and C401, in this sequence.	Repeat steps 2, 3, and 4 above to obtain peak equipment performance.
10	200 mc	200 mc ----------	L409, L404, L405, and L402, in this sequence.	Repeat steps 5 through 8 above to obtain peak equipment performance.
11	200 mc	200 mc ----------	T404 ----------	Adjust for maximum panel meter indication.
12	Not in use	Any setting in frequency range.	V401 ADJ control R405 (fig. 68).	*a.* Remove operating power from test set.

Step	Tuning unit 3 signal generator output frequency	Tuning unit 3 frequency dial setting	Adjustment	Procedure
				b. Unsolder high potential side of fixed resistor R402 (A, fig. 69) from one terminal of variable resistor R405. *c.* Set multimeter (para 81) to measure plate current of rf amplifier V401. Attach alligator clip to each test prod of multimeter to facilitate connections. *d.* Connect positive test prod to unsoldered end of fixed resistor R402. *e.* Connect negative test prod to terminal on R405 which is normally in series with R402. *f.* Invert tuning unit so that shaft of R405 (fig. 68) is accessible. *g.* Apply operating power to test set. *Warning:* **Do not touch multimeter test prods, since this circuit is operating at 150 volts above chassis ground.** *h.* Vary shaft of R405 to obtain indication of 10 milliamperes on multimeter. *i.* Lock shaft in this position by *j.* applying sealing agent. Remove operating power from test set. *k.* Disconnect multimeter test prods from R402 and R405, and resolder R402 to R405. *Note:* Resetting of variable resistor R405 is also required when rf amplifier tube V401 is replaced.
13	Not in use	See step 14 above -----	See step 14 ----------	Perform overall sensitivity test of complete frequency range by using broadband output of impulse generator instead of tuning unit 3 signal generator. Change front-panel controls as follows: IMPULSE GENERATOR DB ABOVE 1 μV/MC switch ----- ON Calibration switch — SHUNT CAL. Function switch — CW PEAK. Impulse generator output controls — Total of 60 db. GAIN control — Set to obtain full-scale panel meter deflection.
14	Not in use	Any setting ----------	Crystal mixer trimmer C-408 (A, fig. 69), accessible from left side of tuner.	Set C408 to middle of its rotational range.

Step	Tuning unit 3 signal generator output frequency	Tuning unit 3 frequency dial setting	Adjustment	Procedure
15	Not in use	Slowly rotate frequency dial over complete frequency spectrum.	Mixer tuning capacitor C404.	While scanning over frequency spectrum, observe panel meter indication for dips. Note frequency settings at which dips occur. At lowest output indications, use soldering aid tool to bend split rotor blades of C404 closer to or farther away from stator blades. Employ tuning wand (para 90) as follows: *a.* Stop rotating tuning dial at frequency that produces lowest indication on main unit panel meter. *b.* Insert powdered iron core end of tuning wand near magnetic field of L404 and L405. *c.* If change in panel meter indication is upscale, closer coupling between L404 and L405 is necessary. However, do *not* vary inductor coupling from setting previously made (step 7, above). Instead, bend one segment of split rotor blade of C404 *slightly closer to* stator. *Caution:* **Avoid short-circuiting rotor and stator blades.** *d.* Insert brass slug end of tuning wand near magnetic field of L404 and L405. *e.* If change in panel meter pointer indication is still upscale, looser coupling between L404 and L405 is necessary. However, do *not* vary inductor coupling from that setting previously made (step 7, above). Instead, bend one segment of split rotor blade of C404 *slightly away from* stator. *Note:* Observe that rotor blade of tuning capacitor is split into five segments. Set tuning dial to frequency that shows lowest meter indication; then bend segment of rotor that is flush with *bottom edge* of stator blades (edge which is closest to partition of rf tuner when viewing right side of tuner as shown in A, figure 69).
16	Not in use	Same as step 15 above --	Rf amplifier V401 tuning capacitor C402.	Same as step 15, except bend split rotor blades of C402 as indicated by inserting tuning wand (para 90) near magnetic field of L401 and L402.
17	Not in use	Same as step 15 above --	Mixer tuning capacitor C404.	Repeat step 15 above until all low-output frequency settings throughout band are minimized.
18	Not in use	Same as step 16 above --	Rf amplifier V401 tuning capacitor C402.	Repeat step 16 above to obtain greatest sensitivity throughout 200- to 400-mc frequency band.

95. If. Amplifier Alignment, Tuning Unit 4, General

a. The alignment of the tuning unit 4 if. amplifier is similar to that of tuning unit 3 (para 92). To align the 42-mc if. amplifier subassembly (housing stages V508 through V512) and the 42-mc if. preamplifier subassembly (housing stages V505 through V507), remove the main unit from its instrument case (para 40*b*, item 12, TM 11-6625-351-12). Remove the dust cover from tuning unit 3. Interconnect tuning unit 3 to the main unit with the test harness (fig. 46).

b. Inject the unmodulated output of the tuning unit 3 signal generator into the if. preamplifier as indicated in the test setup (fig. 91).

(1) Connect one end of Cord CG-55B/U supplied with the tuning unit 3 signal generator into the generator front-panel CARRIER OUTPUT jack. This cord is terminated with a Radio Frequency Plug UG-21B/U at each end.

(2) Use the same cable assembly that was fabricated for aligning the if. amplifier of tuning unit 2 (para 89*a*(2) and (3)).

(3) Disconnect plug P509 (on the input cable assembly at the top of the if. preamplifier) from its mating jack J509 (fig. 72).

(4) Connect the output of the tuning unit 3 signal generator, through the fabricated cable assembly ((2) above), to jack J509 on the top of the if. preamplifier.

Note: Throughout the following alignment procedure, decrease the tuning unit 3 signal generator MICROVOLTS output control and the tuning unit GAIN control (if necessary) so that the main unit panel meter maintains an onscale indication. Initially set the tuning unit 3 signal generator MICROVOLTS control to a value of 20K (equivalent to -20 dbm); then reduce the output setting as required, to keep the panel meter indication lower than full scale.

c. As in tuning units 1, 2, and 3, the cores of the tuned networks on the if. preamplifier and amplifier subassemblies are provided with hexagonal nuts. Use the same plastic alignment tool with internal dimensions for fitting 1/4-inch hexagonal nuts, as was used for the previous tuning units. The following chart indicates the location of the if. alignment adjustments.

Subassembly	Single-tuned networks, adjustable from top of subassembly	Double-tuned networks: primary adjustable from top of subassembly; secondary adjustable from bottom of subassembly
42 mc --------	L535	T506
	Z503	
If. amplifier --	T503	T505
		T504
42 mc --------	----	None
If. preamplifier	T502	
	Z502	
	Z501	
	T501	

Note: Coil L535 is adjustable from the top or bottom of the 42-mc if. amplifier chassis.

d. Set the front-panel controls on the test set as listed in para 88*c*, except for the FREQUENCY RANGE-MC switch; set this switch to the 400-700-mc position.

96. Alignment of 42-Mc If. Amplifiers, Tuning Unit 4 (fig. 72)

a. Set the frequency dial of the tuning unit 3 signal generator to 42 mc and inject the unmodulated output signal into the if. preamplifier jack, J509. This jack is located on the electron tube side of the subassembly.

Note: Do not confuse input jack J509 with input jack J507, which is located at the end of the if. preamplifier adjacent to the gear train assembly. With the FREQUENCY RANGE-MC switch rotated to the 400-700-mc position, microswitch S502 creates a path of continuity from input jack J509 to if. transformer T501. Simultaneously, an open circuit exists at input jack J507 so that the output of only the 400-700-mc tuner can be applied to the if. preamplifier circuit.

b. Set the MICROVOLTS control of the signal generator to produce an approximate midscale indication on the main unit panel meter.

c. The 42-mc if. amplifier is mounted in a horizontal position at the top of the tuning unit. Working from the electron tube side of the 42-mc if. amplifier subassembly, adjust the cores of networks Z503, T506, T505, T504, and T503, in this sequence, to obtain a maximum panel meter indication. As the 42-mc unit is

brought into alignment, decrease the MICROVOLTS control setting on the tuning unit 3 signal generator and the GAIN control setting on tuning unit 3 (if necessary) to maintain an onscale panel meter indication.

d. Working from the tube socket side of the 42-mc if. amplifier subassembly, adjust the cores of transformers T506, T505, and T504, in this sequence, to obtain a further peak indication on the panel meter.

e. The 42-mc if. preamplifier subassembly is also mounted at the top of the tuning unit, with its electron tubes in an inverted position. Working only from the electron tube side of this subassembly, adjust the cores of Z502, Z501, and T501, in this sequence, to obtain a higher indication on the panel meter.

Note: Do not adjust the tunable core of if. transformer T502. T502 is adjusted for peak tuning during the alignment of the 400-700-mc rf tuner (para 97*e*).

f. After completing the procedures given in *a* through *e* above, align signal peaking coil L535 in if. cathode follower stage V512, by following the identical procedure as outlined in paragraph 93*f* for tuning unit 3.

g. After completing the alignment of the if. amplifier (*a* through *f* above), disconnect the output of the tuning unit 3 signal generator from input jack J509 on the preamplifier. Reconnect plug P509, which terminates the output cable from the 400-700-mc tuner, to jack J509. This procedure enables the output of the 400-700-mc tuner to pass through the if. amplifier, through the detector and electrometer assembly, and to the metering circuit in the main unit.

97. Alignment of 400-700-Mc Rf Tuner, Tuning Unit 4 (fig. 72)

a. Align the 400-700-mc rf tuner while the tuning unit is operating outside the main unit. Use the test harness (fig. 46), with the front-panel controls set to the positions listed in para 88*c*, except for setting the FREQUENCY RANGE-MC switch to the 400-700-mc position.

b. The 400-700-mc rf tuner is mounted on the left side of tuning unit 4. To remove the three covers from the rf tuner, proceed as follows:

(1) Loosen the two screws that secure the adjustable slide for the V504 tube clamp to the side cover. Push the slide up toward the top of the tuning unit to the limit of its travel. This action removes a plexiglas tube clamp on the interior of the tuner from the top of oscillator tube V504.

(2) Tighten the two screws to secure the adjustable slide in its highest position of travel.

Caution: **Failure to move the adjustable slide as far as possible before removing the side cover may result in breaking the glass envelope of the oscillator tube.**

(3) Remove the 10 screws and washers that secure the side cover to the 400-700-mc tuner. Lift the side cover off and place it on a clean surface, free of grease and metal filings.

(4) To gain access to the plates of tuning capacitor C520, remove the four screws and washers that secure the top cover to the tuner. Lift the top cover off and place it on a clean surface.

(5) To gain access to the crystal diode compartment, remove the four screws and washers that secure the Z-shaped cover to the bottom area of the tuner. Lift the Z-shaped cover off to gain access to crystal diode CR502, inductor L514, and fixed capacitor C523.

c. Inject the unmodulated output of the tuning unit 4 signal generator (para 81) to the main unit front-panel SIGNAL INPUT jack. The coaxial cable assembly (type 84-Z2-3) supplied with the tuning unit 4 signal generator is terminated in a UG-21B/U at each end; therefore, no adapter is required for mating the main unit SIGNAL INPUT jack.

d. Allow tuning unit 4, the main unit, and

the tuning unit 4 signal generator to warm up for at least 1/2 hour before starting the alignment.

e. With all three covers removed from 400-700-mc tuner, proceed as directed in the following chart.

Step	Tuning unit 4 signal generator output frequency	FREQUENCY RANGE-MC switch position	Adjustment	Procedure
1	710 mc	400-700 mc (with frequency dial initially set for a 390-mc indication).	None ---------	Rotate TUNING control so that rotor and stator blades of C520 are fully meshed. This position of blades can be observed when side and top covers (B, fig. 73) are removed from tuner. This step is preliminary.
2	710 mc	400-700 mc (see procedure column).	Parallel lines in oscillator V504 plate-to-grid circuit (A, fig. 73).	*a.* From fully meshed position of C520, rotate tuning control 22 turns clockwise as viewed from front panel. *Note:* This position of C520 sets up oscillator V504 for heterodyning with incoming signal frequency of 710 mc. *b.* If this setting of C520 does not produce peak indication on panel meter, parallel transmission lines in V504 plate-to-grid circuit must be spread apart or bent closer together. Do *not* change separation of parallel lines from their original preset position by more than ±1/32 inch. Proceed as follows: (1) Rock frequency dial in vicinity of 710 mc and observe panel meter for peak indication. (2) If peak indication occurs at frequency setting higher than 710 mc, reset frequency dial to exactly 710 mc. Spread parallel transmission lines slightly apart so that peak output indication is obtained at exact 710-mc setting of frequency dial. ***Caution:* Avoid touching parallel transmission lines with bare fingers when operating power is applied. One parallel line operates at 105 volts dc above ground; the other is at dc ground potential. Avoid short-circuiting one line to other. *Always* use well-insulated pliers.** (3) To avoid cracking ceramic blocks which support each end of parallel transmission lines, disconnect operating power and remove V504 from its tube socket. Fabricate V-shaped wooden wedge to fill space between two parallel transmission lines. The wedge must be approximately 3/8 inch wide at its widest end and taper down to about 1/8 inch wide along its 3/4-inch length. Apply light pressure only to parallel transmission lines. (4) After adjustment has been made, remove wooden wedge, insert V504 into its tube socket, and reapply operating power. See that peak indication on panel meter occurs when TUNING control is set for 710-mc indication. (5) If the peak indication occurs at frequency setting lower than 710 mc, reset frequency dial to 710 mc; then use procedure in step 2, (3), and (4) above, but bend parallel transmission lines closer together. (6) This completes oscillator V504 alignment at high frequency end of band.

Step	Tuning unit 4 signal generator output frequency	FREQUENCY RANGE–MC switch position	Adjustment	Procedure
3	390 mc	400–700 mc (with frequency dial initially set to 390 mc).	None ---------	Same as in step 1 above.
4	390 mc	400–700 mc. (See *Procedure* column).	Split rotor blades of tuning capacitor C520.	*a.* Fully meshed position of C520 should correspond with frequency dial setting of 390 mc. Rock frequency dial in vicinity of 390 mc to observe that maximum indication on panel meter occurs at this frequency. *b.* If peak indication on panel meter does not occur at frequency dial setting of 390 mc, outer blades of all four sections of C520 (total of 8 blades) must be bent farther away from, or closer to, their stator blades. Proceed as follows: (1) Should peak indication on panel meter occur at frequency setting lower than 390 mc, reset frequency dial to exactly 390 mc. Use soldering aid tool to bend outer rotor blades of C520 slightly farther away from their respective stator blades. Avoid short-circuiting rotor blades to each other. (2) Should peak indication on panel meter occur at frequency setting higher than 390 mc, reset frequency dial to exactly 390 mc; then bend split rotor blades closer toward their stator blades and check panel meter indication. Proper positioning of the rotor segments is obtained when the frequency dial is rocked, and the maximum panel meter indication occurs at 390 mc. frequency dial. (3) This completes rf amplifier and oscillator alignment at low frequency end of band.
5	700 mc	400–700 mc (with frequency dial set to vicinity of 700 mc).	Trimmer tab capacitors C580, C590, and C600 (B, fig. 73) for coarse setting.	*a.* Initially rotate TUNING control to low end of band, which corresponds to fully meshed condition of C520. *b.* From fully meshed position of C520, rotate TUNING control 20 to 21 turns clockwise as viewed from front panel. *c.* Observe panel meter on main unit for peak indication at frequency dial setting of 700 mc. If peak does not occur at this setting of frequency dial, realignment of local oscillator is required (steps 1 and 2 above). After oscillator is properly aligned, see that peak indication on panel meter occurs at 700-mc dial setting. To obtain maximum signal output, use screwdriver to bend C580, C590, and C600 to produce highest possible panel meter indication.
6	700 mc	400–700 mc (frequency dial set exactly at 700 mc).	Trimmer tab capacitors C580, C590, and C600 for fine setting.	*a.* For fine setting of trimmer tab capacitors (B, fig. 73), two laboratory tools must be fabricated. Instructions and critical dimensions are given in figure 92. One tool is phenolic rod approximately 1/4 inch in diameter by 8 inches long; the other is brass tool approximately 1/8 inch in diameter by 9-3/8 inches long. ***Caution:*** **When inserting brass tool into bottom area of rf amplifier cavity, avoid contacting plate circuit of V503. This plate operates**

Step	Tuning unit 4 signal generator output frequency	FREQUENCY RANGE–MC switch position	Adjustment	Procedure
				at 150 volts above ground and shock hazard exists. No shock hazard is present if brass rod touches tuning capacitor, because this tuning element operates at dc chassis ground potential. *b.* Insert brass tool completely into each of three cavities tuned by C520A, C520B, and C502C (A, fig. 73). Observe indication on panel meter when brass tool is inserted into each cavity. If change in panel meter indication is upscale, remove brass tool and bend metallic trimmer tab away from stator (toward upright wall of cavity). *c.* Insert approximately 2 to 3 inches of phenolic tool into each of three tuned cavities. If change in panel meter indication is also upscale, remove phenolic tool and bend metallic trimmer tab closer to stator (away from upright wall of cavity). *c.* Repeat *b* and *c* above until there is no increase in panel meter indication when brass tool and then phenolic tool, are inserted into each tuned cavity.
7	400 mc	400–700 mc (with frequency dial set to 400 mc).	T502 ---------	Adjust for maximum panel meter indication.
8	Not in use	400–700 mc (with frequency dial set to any point in band).	V503 ADJ control R508.	*a.* Remove operating power from test set. *b.* Unsolder wire that connects center terminal of R508 to C521 on exterior side of rf tuner (A, fig. 73). *c.* Set multimeter to measure plate current of V503. Attach alligator clip to each test prod of multimeter, to facilitate connections. *d.* Connect positive test prod to terminal of C521, which projects through wall of tuned cavity. *e.* Connect negative test prod to center terminal of R508. *f.* Work from rear left side of tuning unit 4 (as viewed from front panel), so that shaft of R508 is accessible. *g.* Apply operating power to test set. ***Caution:* Do not touch multimeter test prods, since this circuit is operating at 150 volts dc above chassis ground.** *h.* Vary shaft of R508 to obtain indication of 10 ma on multimeter. *i.* Lock shaft in this position by applying sealing agent. *j.* Remove operating power from test set. *k.* Disconnect multimeter test prods from C521 and center terminal of R508, and resolder C521 to R508. *Note:* Resetting of R508 is also required after replacing V503.
9	Not in use	See step 10 below.	See step 10 ---	Perform overall sensitivity test of 400–700-mc band; use broadband output of impulse generator instead of tuning unit 4 signal generator. Change front-panel control settings as follows: IMPULSE GENERATOR DB ABOVE 1 μV/MC switch ---------- ON Calibration switch ------- SHUNT CAL

Step	Tuning unit 4 signal generator output frequency	FREQUENCY RANGE–MC switch position	Adjustment	Procedure
				Function switch ---------- CW PEAK Impulse generator output controls --------- Total of 50 db GAIN control ---------- Set to obtain full-scale panel meter indication.
10	Not in use	400–700 mc. (Slowly rotate frequency dial over complete tuning range.)	Split rotor blades of tuning capacitor C520.	Scan complete frequency spectrum; observe panel meter indication for dips. Note frequencies at which dips occur. Carefully readjust split rotor blades of tuning capacitor. *a.* Observe that C520 is divided into three sections (A, B, and C) in rf amplifier circuit. C520A and C520B tune input cavity at cathode of V503. C520C tunes output cavity at plate of V503. Each section of tuning capacitor consists of four split segment rotor blades. Bend only two outer rotors, at particular frequency settings that show low panel meter indications. Do *not* bend segments on two inner rotors; doing so will short-circuit rotors to stators. *b.* Repeat fine adjustments of tuning capacitor sections A, B, and C. This step will align rf amplifier at low output settings of frequency dial. *Note:* Do not readjust rotor blades of C520D, which is in oscillator circuit.

Note: Do not readjust the tuning shaft of mixer coil L514 in the crystal diode compartment. This coil has been preset in factory alignment and is locked into position. Field adjustment is unnecessary and undesirable.

98. Alignment of 700-1,000-Mc Rf Tuner, Tuning Unit 4 (fig. 72 and 74)

a. Align the 700-1,000-mc rf tuner while the tuning unit is operating outside the main unit. Use the test harness (fig. 46) with the front-panel controls set to the positions listed in para 88c, except for setting the FREQUENCY RANGE-MC switch to the 700-1,000-mc position.

b. The 700-1,000-mc rf tuner is mounted on the right side of tuning unit 4. To remove the two covers from this rf tuner, proceed as follows:

(1) Remove the eight screws and washers that secure the side cover. Lift the cover off and place it on a clean surface, free of grease and metal filings. Access to rf amplifier V501, oscillator V502, and tuning capacitor C510 is now available.

(2) To gain access to the crystal diode compartment, remove the four screws that secure the second

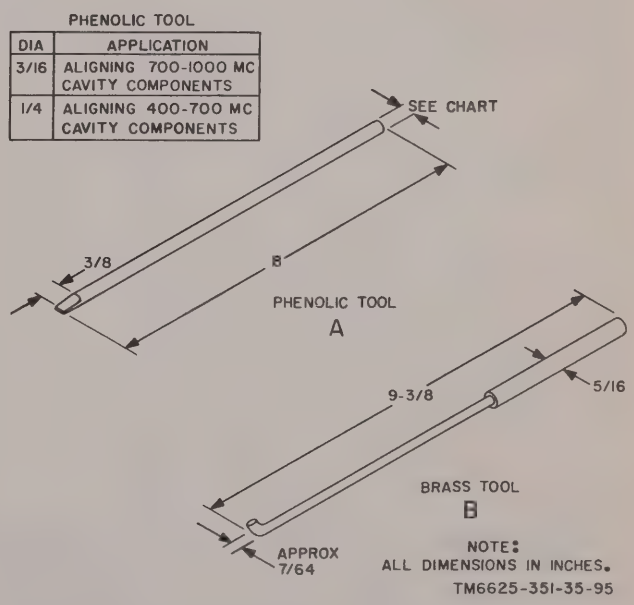

Figure 92. Alignment tools required for tuning unit 4.

cover to the side of the rf tuner. Lift off the cover to gain access to crystal diode CR501, inductor L505, and fixed capacitor C508.

c. Set up the tuning unit 4 signal generator for connection to the main unit front-panel SIGNAL INPUT jack. No adapter is required for mating the UG-21B/U on the cable assembly supplied with the tuning unit 4 signal generator, to the SIGNAL INPUT jack.

d. Allow tuning unit 4, the main unit, and the tuning unit 4 signal generator to warm up for at least 1/2 hour before starting alignment.

e. With the covers removed from the 700-1,000-mc tuner, proceed as directed in the following chart.

Step	Tuning unit 4 signal generator output frequency	FREQUENCY RANGE–MC switch position	Adjustment	Procedure
1	Not in use	700-1,000 mc (with frequency dial initially set to 700 mc).	None ---------	Rotate TUNING control so that rotor and stator blades of C510 are fully meshed. This position of blades can be observed when covers (fig. 72) are removed from 700-1,000-mc tuner.
2	Not in use	700-1,000 mc. (See procedure column.)	None ---------	From fully meshed position of C510, rotate TUNING control clockwise 22 turns as viewed from tuning unit 4 front panel.
3	Not in use	700-1,000 mc (with frequency dial set to vicinity of 1,025 mc).	Tuning unit 4 wavemeter tuning control.	Place tuning unit 4 wavemeter (para 81) near oscillator cavity of 700-1,000-mc tuner. Set tuning unit 4 wavemeter for 1,065-mc indication and observe microammeter for peak indication. If peak meter indication is observed at 1,065-frequency setting of tuning unit 4 wavemeter, no adjustment of V502 is required.
4	Not in use	Same as step 3 above.	Repositioning of oscillator V502 to lower its operating frequency.	If peak indication on tuning unit 4 wavemeter's microammeter occurs at frequency higher than 1,065 mc, change position of V502 within tuned cavity. Do *not* change position of V502 from its original location by more than 1/8 inch. Proceed as directed below. ***Caution:*** **Avoid touching two hexagonal nuts, which secure plate and grid pins of V502 to frame of C510, with the bare fingers when operating power is applied. One stator of C510 operates at 105 volts dc above ground; the other is at dc ground potential. *Always* use well-insulated tools when aligning rf tuner.** *a.* Use 1/4-inch socket wrench to loosen two hexagonal nuts (A, fig. 74) that secure two pins of acorn-shaped oscillator tube V502 to ceramic block on frame of C510. *b.* Push oscillator tube *away* from ceramic block (1/8-inch adjustment limit provided by cavity design). *c.* Retighten two hexagonal nuts and check with tuning unit 4 wavemeter for oscillator frequency of 1,065 mc. *d.* Repeat *a* through *c* above, if necessary, for precise tuning of V502 to 1,065 mc.
5	Not in use	Same as step 3 above.	Repositioning of V502 to raise its operating frequency.	If peak indication on tuning unit 4 wavemeter's microammeter occurs at frequency lower than 1,065 mc, proceed as outlined in step 4 above, but push V502 closer toward ceramic block. After retightening two hexagonal nuts, check with tuning unit 4 wavemeter to be sure that oscillator is on frequency. Repeat procedure, if necessary, for precise adjustment. This step completes oscillator alignment at high end of band.

Step	Tuning unit 4 signal generator output frequency	FREQUENCY RANGE–MC switch position	Adjustment	Procedure
6	675 mc	700–1,000 mc (with frequency dial set to low end of its range).	Split rotor blades of tuning capacitor C510.	Connect output of tuning unit 4 signal generator to test set SIGNAL INPUT jack and proceed as follows: *a.* Rock frequency dial to vicinity of 700 mc and observe that maximum indication on panel meter occurs when C510 rotor and stator blades are fully meshed. *Note:* Approximately 25-mc frequency overlap is provided at end of tuning range; therefore, setting frequency dial to its uncalibrated portion permits tuning to frequency of 675 mc. *b.* If peak indication on panel meter does not occur at fully meshed position of C510, bend outer blades of all four sections of C510 (total of 8 blades) farther away from, or closer to, their stator blades. Proceed as follows: (1) Should peak indication on panel meter occur at too low a frequency, use soldering aid tool and bend four rotor blades of C510D slightly farther away from their respective stator blades. Avoid short-circuiting of rotor blades to each other. After adjustment, vary tuning unit 4 tuning control and see that peak indication on main unit panel meter occurs when C510 is fully meshed. (2) Should peak indication on panel meter occur at too high a frequency, bend rotor blades of C510D closer toward their stator blades. Check main unit panel meter indication. Proper positioning of rotor segments is obtained when TUNING control is rocked, and maximum panel meter indication occurs when tuning capacitor C510 is fully meshed. (3) Steps (1) and (2) above complete rf amplifier and oscillator alignment at low-frequency end of band.
7	1,000 mc	700–1,000 mc (with frequency tuning dial set to vicinity of 1,000 mc).	Trimmer tab capacitors C550, C560, and C570 (B, fig. 73), for coarse setting.	Same as in (para 97*e*), step 5 for 400–700-mc tuner, with following exceptions: *a.* In step 5*a*, set frequency dial initially to low end of band and observe fully meshed condition of C510. *b.* In step 5*b*, tuning capacitor is C510. *c.* In step 5*c*, peak indication should occur at frequency dial setting of 1,000 mc. If adjustment is required, bend C550, C560, and C570 to produce peak meter indication.
8	1,000 mc	700–1,000 mc (with frequency dial set at exactly 1,000 mc).	Trimmer tab capacitors C550, C560, and C570 for fine setting.	Same as in (para 97*e*), step 6 for 400–700-mc tuner, with following exceptions: *a.* In caution for step 6*a*, avoid contacting plate circuit of V501. *b.* In step 6*b*, insert brass tool into tuned cavities identified as C510A, C510B, and C510C (A, fig. 74).
9	Not in use	700–1,000 mc (with frequency tuning dial set to any point in band).	V501 ADJ control R503.	*a.* Same as in (para 97*e*), step 7 for 400–700 mc tuner, with following exceptions: *b.* In step 7*b*, unsolder wire that connects center terminal of R503 to L504 (A, fig. 74) on exterior side of 700–1,000 mc tuner. *c.* In step 7*c*, multimeter now measures plate current of V501. *d.* In step 7*d*, connect positive test prod to L504. *e.* In step 7*e*, connect negative test prod to center terminal of R503.

Step	Tuning unit 4 signal generator output frequency	FREQUENCY RANGE–MC switch position	Adjustment	Procedure
				f. Work from rear right side of tuning unit 4 (as viewed from front panel) so that shaft of R503 is accessible.
10	Not in use	See step 11 below.	See step 11.	Same as in (para 97*e*), step 8 for 400–700 mc tuner, except for checking high band of tuning unit 4.
11	Not in use	700–1,000 mc. (Slowly rotate frequency dial over complete tuning range.)	Split rotor blades of tuning capacitor C510.	Same as in (para 97*e*), step 9 for the 400–700 mc tuner, except that in step 9*a*, C510 is divided into three sections. Capacitors C510A and C510B tune cathode circuit of V501. C510C tunes plate circuit of V501. Bend four rotor blades in each section of C510A, B, and C to align amplifier.

Note: Do not readjust the tuning shaft of mixer coil L505 in the crystal diode compartment. This coil has been preset in factory alignment and is locked into position. Field adjustment is unnecessary and undesirable.

CHAPTER 4
TROUBLESHOOTING

99. Purpose of Final Testing

The tests outlined in this chapter are designed to measure the performance capability of a repaired test set. Equipment that meets the minimum standards will furnish satisfactory operation, equivalent to that of new equipment.

100. Test Equipment Required

In addition to the test equipment listed in para 81, the following chart lists the test equipment required for final testing, the associated technical manuals, assigned common names, and application. Commercial test equipment is listed where Signal Corps test equipment was not used for making measurements.

Test equipment	Technical manual	Common name	Application
Audio Oscillator TS-382(*)/U[a]	TM 11-6625-261-12	Audio oscillator --	Testing audio amplifier response (para 102).
Step attenuator, Empire Devices Inc., model AT-103-C.	----------	5-db variable step attenuator.	Testing for linearity (para 103).
Coaxial attenuator, Empire Devices Inc., model AT-50-10.	----------	10-db pad --------	Testing for cw sensitivity (para 105), image rejection (para 107), if. rejection (para 108), and band width determination (para 109).
Coaxial attenuator, Empire Devices Inc., model AT-50-20.	----------	20-db pad --------	Testing for interference measurement (para 104).
Impulse generator, Empire Devices Inc., model IG-115.	----------	IG-115 ----------	Testing for interference measurement (para 104).
Power Meter, Hewlett-Packard, model 431A.	----------	Power meter -----	Power monitor used when test set is calibrated as two-terminal rf voltmeter (para 110).
Thermistor Mount, Hewlett-Packard, model 478A.	----------	Thermistor mount	Power monitor used when test set is calibrated as two-terminal rf voltmeter (para 110).
Switching Unit, Empire Devices Inc., model SU-105.	----------	Switching unit ----	Switching unit is used when test set is calibrated as two-terminal rf voltmeter (para 110).
Attenuator Panel, Empire Devices Inc., model AT-106H.	----------	20-db variable step attenuator.	Attenuator used when test set is calibrated as two-terminal rf voltmeter (para 110). Rf-if. test (para 112).
Variable Frequency Power Supply, Empire Devices Inc., model VP-410.	----------	Power supply ----	Power source for power supply test (para 113).

[a] Indicates Audio Oscillators TS-382A/U, TS-382B/U, TS-382D/U, TS-382E/U, and TS-382F/U.

a. Characteristics of 5-Db Variable Step Attenuator. The required technical characteristics of the 5-db variable step attenuator are:

(1) Five steps of attenuation from 0- to 25-db, in 5-db increments.
(2) Accuracy of ±0.25-db.
(3) Power rating of 1-watt continuous

power or 1-kilowatt peak power.
(4) Input and output impedance of 50-ohms.
(5) Voltage standing wave ratio no greater than 1.15- to 1-UP to a frequency limit of 1,000-mc.
(6) Coaxial series N-type connectors at input and output terminations.

b. Characteristics of 20-Db Variable Step Attenuator. The required technical characteristics of the 20-db variable step attenuator are the same as those listed in *a* above, except that there are five steps of attenuation from 0- to 80-db, in 20-db increments.

c. Characteristics of 10-Db Pad. The required technical characteristics of the 10-db pad are:
(1) Attenuation ratio of 10-db.
(2) Accuracy of ±0.25-db.
(3) Coaxial structure, terminated in N-type male connector at one end and N-type female connector at opposite end.
(4) Power rating of 1-watt continuous power or 1-kilowatt peak power.
(5) Input and output impedance of 50-ohms.
(6) Voltage standing wave ratio no greater than 1.15 to 1 up to a frequency limit of 2,000-mc.

d. Characteristics of 20-Db Pad. The required technical characteristics of the 20-db pad are the same as those listed in *b* above, except that the attenuation ratio is 20-db.

e. Characteristics of Power Meter. The required technical characteristics of the power meter are:
(1) Power range from 10-microwatts to 10-milliwatts (seven ranges). Power range also calibrated in dbm from -20-dbm to +10-dbm.
(2) Accuracy ±3 percent of full scale on all ranges.
(3) Operating impedance of 100- or 200-ohms, negative, for operating with thermistor mount.

f. Characteristics of Thermistor Mount. The required technical characteristics of the thermistor mount are:
(1) Frequency range of 10-mc to 10-kmc.
(2) SWR (standing wave ratio) of less than 1.5 (less than 1.3 from 50-mc to 7-kmc).
(3) Power range of 10-microwatts to 10-milliwatts.

g. Characteristics of Power Supply. The required technical characteristics of the power supply are:
(1) Variable frequency range of 47- to 6,000-cps in two ranges: 47- to 600-cps and 470- to 6,000-cps.
(2) Power output 400-va (volt amperes) continuous operation.
(3) Output voltage of 75- to 150-volts variable.
(4) Distortion of less than 1-percent from 47- to 2,000-cps and less than 3-percent from 2,000- to 6,000-cps.
(5) Voltage regulation of less than 2-percent from no load to full load.
(6) Frequency accuracy of ±-percent.
(7) Frequency stability of ±1/2-percent after 15 minute warmup.

h. Characteristics of IG-115. The required technical characteristics of the IG-115 impulse generator are:
(1) Frequency spectrum of 100-kc to 1,000-mc, flat within ±1/2-db.
(2) Pulse width of 0.0005-microsecond.
(3) Output impedance of 50-ohms.
(4) Output level (peak) of 100,000-microvolts per megacycle bandwidth, adjustable over a 100-db range by means of step attenuators in 1-db steps.
(5) Pulse polarity reversible.
(6) Repetition rate of 50- to 60-cps (line frequency).

i. Characteristics of Switching Unit. The required characteristics of the switching unit are:
(1) Coaxial type switch construction.
(2) Frequency limit up to 1,000-mc.

j. Additional Items Required for Final Testing.
(1) Resistor, 600-ohm, 1/2-watt.
(2) Potentiometer, 250,000-ohm.
(3) Cable, Radio Frequency RG-5B/U (or RG-212/U).
(4) Connector, Plug, Electrical UG-18D/U (two each).

(5) Cable, Radio Frequency RG-58/U.
(6) Connector, Plug, Electrical UG-1095/U.
(7) Connector, Male Contact: AN Radio Frequency Plug UG-88/U.
(8) Adapter UG-349/U.

101. Dial Calibration Accuracy

a. With a tuning unit plugged into the main unit tuning unit compartment, connect a cable from the rf output jack on the applicable tuning unit signal generator to the SIGNAL INPUT jack on the main unit.

b. Set the controls as described in the signal substitution techniques, paragraphs 71*a*, 722*a*, 73*a*, or 74*a*, as applicable for the tuning unit in use.

c. Set the function switch to the CW AVERAGE position.

d. Set the band switch (if applicable) and the TUNING control to the lowest band and tuning-dial frequency setting. Set the tuning unit signal generator to the same frequency.

e. Adjust the attenuator on the tuning unit signal generator to obtain an onscale reading on the panel meter of the main unit.

f. Adjust the TUNING control on the tuning unit to obtain the maximum reading on the meter. If necessary, adjust the attenuator on the tuning unit signal generator to keep the reading on scale.

g. Read the frequency on the tuning unit dial. This must be within 2-percent of the known accurately calibrated tuning unit signal generator frequency.

h. Repeat the procedures given in *d* through *g* above, increasing the tuning unit signal generator frequency in steps of 10-mc.

i. Repeat the procedures given in *a* through *h* above with a different frequency range tuning unit connected in the main unit, and starting at its lowest frequency setting. For each tuning unit, the frequency dial accuracy must be within 2-percent of the tuning signal generator frequency.

102. Audio Amplifier Response Test (fig. 93)

To check the response of audio amplifier V701 in the main unit, set up the equipment as shown in figure 93 and proceed as follows:

a. Remove the main unit from its instrument case (para 40*b* item 12, TM 11-6625-351-12).

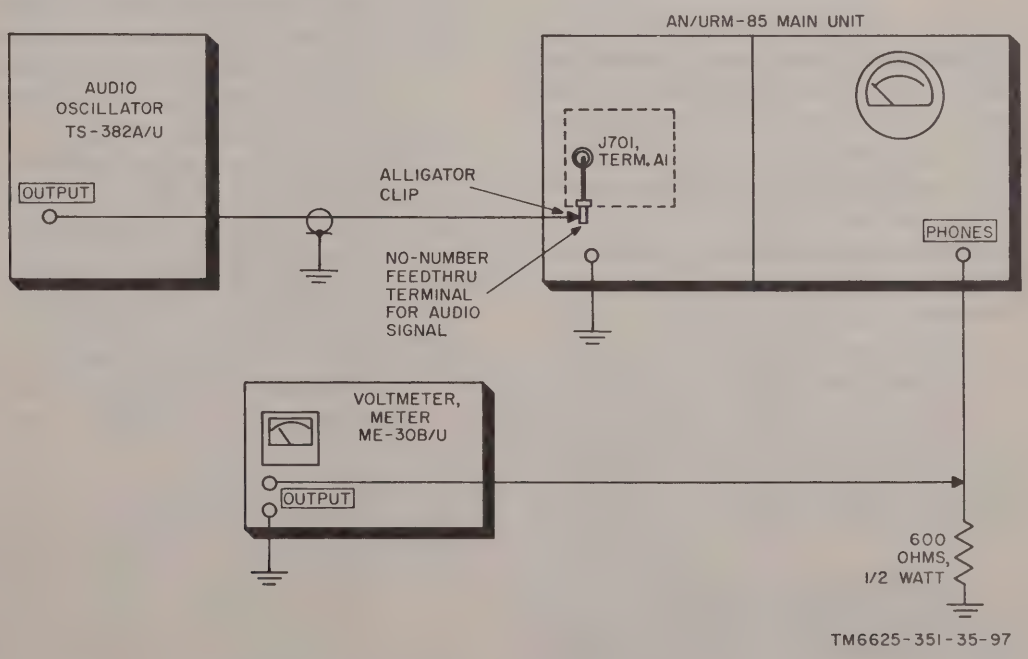

Figure 93. Test setup for audio amplifier response.

b. Connect the output of the audio oscillator (para 100) to the input of audio amplifier V701A in the main unit of the test set. A convenient point for injecting the audio oscillator signal is at the unnumbered feedthrough terminal at the bottom right corner of the filter box assembly (fig. 45). This terminal is essentially the same circuit point as terminal A1 of connector J701.

c. Connect Voltmeter, Meter ME-30B/U across a 600-ohm, 1/2-watt resistor, connected from PHONES jack J702 to chassis ground.

d. Adjust the output of the audio oscillator to produce a signal of 0.1-volt amplitude from terminal A1 of J701 to ground.

e. Tune the audio oscillator to 1,000-cps and record the voltage indication shown on the ME-30B/U.

f. Repeat procedure *e* above at the test frequencies of 150, 500, 2,000, 3,000, 4,000, and 5,000-cps. Note the voltage reading at each test frequency. The audio response curve must be flat, within 8-db of the 1,000-cycle value, with a gradual slope-off at each end. There must be no resonant peaks.

103. Linearity Test
(fig. 94)

Two tests are required to check the linearity of the test set; one checks the linearity in the PULSE PEAK position of the function switch, and the other checks the linearity in the CW AVERAGE position of the function switch. Remove the main unit from its instrument case (para 40 *b,* item 12, TM11-6625-351-12). Set up the equipment as shown in figure 94 and proceed as follows:

a. Pulse Peak Test. Connect the applicable tuning unit signal generator (depending on the tuning under test) through a 5-db variable step attenuator (para 100), or equivalent, and through the RG-5B/U cable, to the SIGNAL INPUT jack of the test set.

(1) Set the main unit function switch to the PULSE PEAK position.

(2) Set the tuning unit signal generator output level control to produce a 1,000- or 10,000-microvolt signal (as required) at the SIGNAL INPUT jack (any frequency).

(3) Set the variable 5-db step attenuator to the 25-db position.

(4) Rotate the SIGNAL ATTENUATOR DB switch to 60 and adjust the GAIN control on the tuning unit to produce a 0-db indication on the main unit panel meter.

(5) Decrease the setting of the 5-db variable step attenuator in four steps, from 25- to 5-db, and record the corresponding indication of the AN/URM-85 panel meter.

(6) Check the panel meter for a 5-db ±1 increase for each step decrease of the 5-db variable step attenuator.

b. CW AVERAGE Test. This test is designed to check the test set for linearity when a 100-percent modulated cw signal is received at the SIGNAL INPUT jack. Signal sources capable of producing such a signal are not readily available. The following test procedures, when used with an unmodulated cw source, will simulate the conditiions above. For this test, change the setting of the function switch to the CW AVERAGE position.

(1) Set the tuning unit signal generator output level control to produce a 2,000-microvolt, or a 20,000-microvolt signal (as required) at the SIGNAL INPUT jack.

(2) Set the frequency of the tuning unit signal generator and the frequency dial of the tuning unit under test to a frequency at the high end of the band under test.

(3) Adjust the GAIN control on the tuning unit to produce a full-scale, 20-db indication on the main unit panel meter with the variable 5-db step attenuator set to the 5-db position.

(4) Place the IF. CATHODE FOLLOWER ADJ switch S704, a chassis adjustment control (fig. 51) in its open-circuit position (check with a multimeter). Shunt its terminals with a 250,000-ohm potentiometer. Use alligator clips to connect one

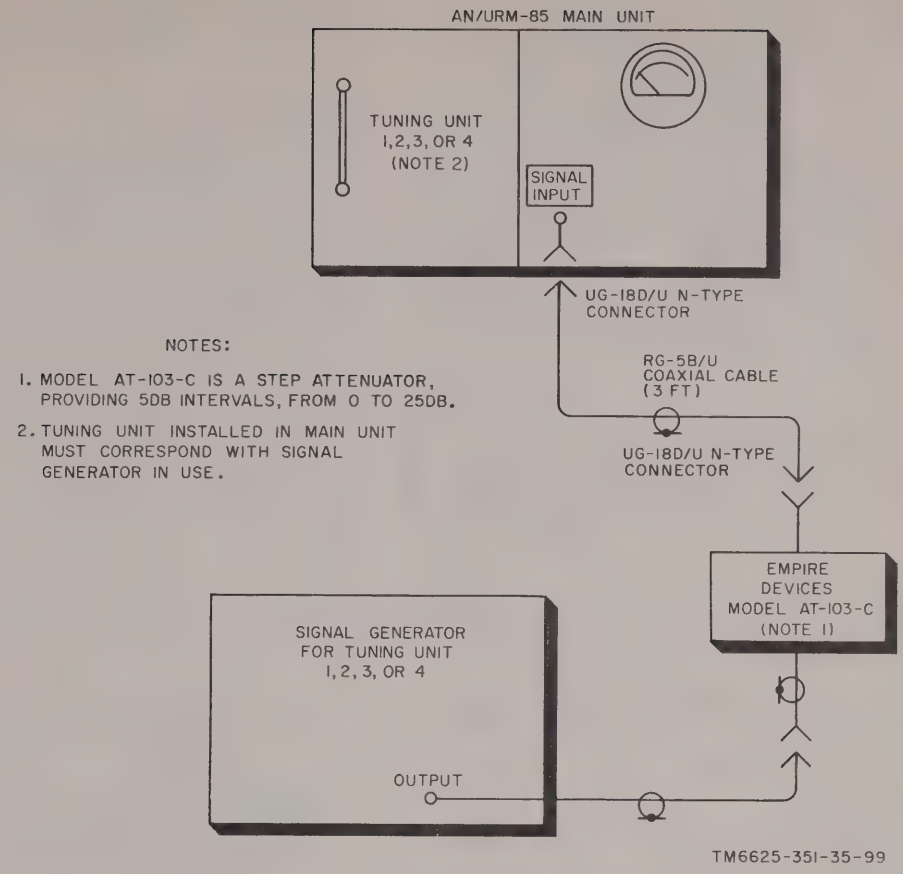

Figure 94. Test setup for linearity check.

end terminal and one center terminal of the potentiometer to the terminals of S704.

(5) Adjust the variable arm of the externally connected potentiometer to produce an indication of 14 db on the AN/URM-85 panel meter. This decrease of 6 db from the panel meter indication, given in (3) above, must be obtained by setting the arm of the potentiometer to some point in its resistance range.

(6) Increase the 5-db variable step attenuator in four 5-db steps and record the corresponding indication on the test set panel meter. This indication should be within ±1 db at all steps.

(7) Repeat the procedures given in (1) through (6) above for each of the remaining tuning units at the high end of the frequency range. In each case, the change in meter indication from S704 in its normally closed-circuit position to its open-circuit position (with the 250,000-ohm potentiometer across S704 terminals) must be 6 db. The potentiometer arm can be set to different positions within its resistance range when a different tuning unit is under test.

104. Interference Measurement

To perform this test, the IG-115 impulse generator is required. Set up the equipment as shown in figure 95, and proceed as follows:

a. Connect the IMPULSE OUTPUT jack of the IG-115 impulse generator, through the 20-db pad (direct connection), to the SIGNAL INPUT jack of the test set under test.

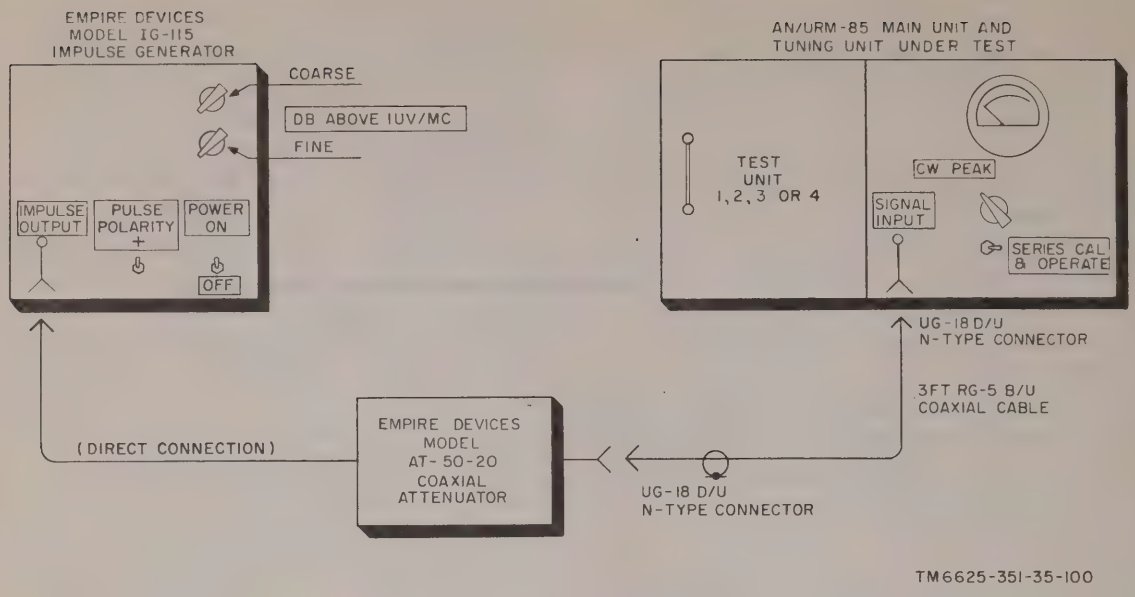

Figure 95. Test setup for interference measurement.

b. On the IG-115 impulse generator, proceed as follows:

(1) Set the POWER switch to the ON position.

(2) Set the PULSE POLARITY switch to the + position.

(3) Set the DB ABOVE 1μV/MC coarse and fine output level controls to a value of 20 db greater than the settings shown in the calibration charts (4A and 4B) supplied with each test set. The tuning unit and frequency selected will determine the DB ABOVE 1μV/MC corase and fine output level settings. For instance, if the calibration chart shows a control setting of 62 db for the frequency selected, set the DB ABOVE 1μV/MC coarse and fine output level controls to a value of 82 db.

c. On the unit under test, proceed as follows:

(1) Rotate the function switch to the CW PEAK position.

(2) Set the the calibration switch to SERIES CAL & OPERATE.

(3) If tuning unit 1 is installed in the main unit, rotate the SIGNAL ATTENUATOR DB control to the 0 CW ONLY position.

(4) If tuning unit 2, 3, or 4 is installed in the main unit, rotate the SIGNAL ATTENUATOR DB control to 20.

(5) With the test setup as indicated (fig. 95), record the pointer deflection on the panel meter of the unit under test.

d. On the IG-115 impulse generator, set the POWER switch to OFF.

e. On the unit under test, perform the following procedure:

(1) Set the calibration switch to SHUNT CAL.

(2) Set the IMPULSE GENERATOR DB ABOVE 1μV/MC switch to ON.

(3) Set the impulse generator coarse and fine output controls to those settings that produce the same pointer deflection as in *c*(5) above. The settings of the output controls must correspond within ±1 db of the calibratiion chart control setting shown for the frequency selected.

105. CW Sensitivity

a. With a tuning unit plugged into the main unit, use the same test setup as in figure 94 except for substituting the 10-db pad (para 100) for the 5-db variable step

attenuator. Use the applicable tuning unit signal generator (para 81) for the tuning unit under test.

b. Operate the test set front-panel controls as follows:

(1) Set the SIGNAL ATTENUATOR DB control to the 0 CW ONLY position.
(2) Set the function switch to the CW AVERAGE position.
(3) Set the calibration switch to the SERIES CAL & OPERATE position.

c. Adjust the tuning unit signal generator output level control and the test tuning unit GAIN control to produce a panel meter deflection of 10 microvolts.

d. Reduce the tuning unit signal generator output level to zero, and record the residual noise level indicated on the test set panel meter. This residual level must not exceed the value listed in the chart that follows:

Tuning unit under test	Cw sensitivity (microvolts)
1	0.5.
2	1.0 when operating from 20 to 100 mc.
2	1.5 when operating from 100 to 220 mc.
3	5.
4	5.5.

e. Repeat the procedures given in *a* through *d* above at the high and low ends of each frequency band, and at five equally spaced frequencies over each band.

106. Impulse Noise Sensitivity

Note: No signal generator is required for the following test.

a. Set the test front-panel controls as follows:

(1) The SIGNAL ATTENUATOR DB switch to the 0 SUBST ONLY position.
(2) The function switch to the PULSE PEAK position.
(3) The calibration switch to the SHUNT CAL position.
(4) The IMPULSE GENERATOR DB ABOVE 1μV/MC switch to the OFF position.
(5) The tuning unit GAIN control to produce a zero db pointer deflection on the panel meter.

b. Set the IMPULSE GENERATOR DB ABOVE 1μV/MC switch to the ON position, and set the impulse generator coarse and fine output level controls to produce a 20-db indication on the panel meter. The sum of the coarse and fine output control settings must not exceed the value listed in the following chart:

Tuning unit under test	Impulse noise sensitivity (in db above 1 microvolt per mc)
1	54.
2	45 when operating from 20 to 70 mc.
2	48 when operating from 70 to 220 mc.
3	45.
4	45.

c. Repeat the procedures given in *a* and *b* above at the high and low ends of each frequency band, and at five equally spaced frequencies over each band.

107. Image Rejection

a. With a tuning unit plugged into the main unit, connect the applicable tuning unit signal generator for the tuning unit under test as directed in para 105*a*.

b. Set the test set front-panel controls as directed in paragraph 105*b*.

c. Tune the tuning unit signal generator to the lowest frequency of the tuning unit under test and adjust the tuning unit signal generator output level control and the tuning unit GAIN control to produce a full-scale indication on the test set panel meter. Use a 1-microvolt test signal when checking tuning unit 1; use a 10-microvolt test signal when checking tuning unit 2, 3, or 4. Record in db the tuning unit signal generator output level control setting required to produce the full-scale panel meter indication.

d. Retune the tuning unit signal generator to the nearest image frequency, which is twice the if. of the tuning unit under test, plus the fundamental tuned frequency. Typical image frequencies for the lowest frequency of each band of the four tuning units are listed in the following chart:

Tuning unit	Band (mc)	If. amplifier center frequency (mc)	Image frequency for lowest frequency point of band (mc)
1	.15-.36	0.455	1.06
1	.36-.87	1.6	3.56
1	.87-2.1	0.455	1.78
1	2.1-5.2	1.6	5.3
1	5.2-12.7	1.6	8.4
1	12.7-30	1.6	15.9
2	20-70	10.7	41.4
2	70-220	10.7	98.4
3	200-400	42	284
4	400-700	42	484
4	700-1,000	42	784

e. After determining the image frequency for the frequency under test, apply this frequency from the tuning unit signal generator to the test set.

f. Increase the tuning unit signal generator level control setting to produce a full-scale panel meter indication. The ratio of the two signal generator output level control settings in db (in this procedure and that in *c* above) must meet the requirements of the following chart:

Tuning unit under test	Minimum image rejection (db)
1	40.
2	70 when operating from 20 to 70 mc.
2	35 when operating from 70 to 220 mc.
3	35.
4	40 when operating from 400 to 700 mc.
4	35 when operating from 700 to 1,000 mc.

g. Repeat the procedures given in *c* through *f* above at the middle and highest frequency points of each band for all tuning units.

108. If. Rejection

a. With a tuning unit plugged into the tuning unit compartment, connect the applicable signal generator for the tuning unit under test as directed in paragraph 105*a*.

b. Set the AN/URM-85 front-panel controls as directed in paragraph 105*b*.

c. Repeat the procedure given in paragraph 107*c*.

d. Retune the signal generator to the intermediate frequency of each band, as listed in the chart in paragraph 107*d*.

e. Apply this if. test signal to the test set.

f. Increase the signal generator level control setting to produce a full-scale meter indication. The ratio of the two signal generator output level control settings in db (in this procedure and that in *c* above) must meet the requirements of the following chart:

Tuning unit under test	Minimum if. rejection (db)
1	50 for .15 to .36 mc band only.
1	60 for all bands except .15 to .36 mc.
2	55 when operating from 20 to 40 mc.
2	70 when operating from 40 to 220 mc.
3	70.
4	70.

g. Repeat the procedures given in *c* through *f* above at the middle and highest frequency points of each band for all tuning units.

109. Rf Intermodulation

The rf intermodulation test concerns the response of the test set to the intermodulation components that are generated ahead of the if. amplifier in each tuning unit. The response is measured with the test set receiving high-intensity broadband interference signals from the self-contained impulse generator. No signal generator is required. Make the test as follows:

a. Rotate the SIGNAL ATTENUATOR DB control to the 0 CW ONLY position.

b. Set the calibration switch to the SHUNT CAL position.

c. Set the function switch to the PULSE PEAK position.

d. Set the TUNING control and the frequency dial of the tuning unit under test to the lowest frequency of the lowest band.

e. With the IMPULSE GENERATOR DB ABOVE 1 V/MC switch at its OFF position, vary the tuning unit GAIN control to produce a zero db indication on the upper scale of the panel meter.

f. Set the IMPULSE GENERATOR DB ABOVE 1μV/MC at ON and adjust the impulse generator coarse and fine output controls to produce a 2-db deflection on the panel meter. Record the settings of the

impulse generator output level controls; the sum of the settings is the reference sensitivity.

g. Now disable the local oscillator in the tuning unit under test. Each tuning unit requires a different procedure for this operation. Perform the procedure outlined in the following chart:

Tuning unit	Band	Method of disabling local oscillator in rf tuner
1	All	Short-circuit the grid, pin 7, of oscillator tube V3 (fig. 47 and 56) to chassis ground.
2	20-70 mc	Unsolder R216 from L201D (fig. 65).
	70-220 mc	Unsolder L214 from XV206 plate, pin 1 (fig. 65).
3	200-400 mc	Unsolder resistor R409 from feedthru capacitor C422 (A, fig. 69).
4	400-700 mc	Unsolder rf choke L519 from feedthru capacitor C527 (A, fig. 73).
	700-1,000 mc.	Unsolder rf choke L522 from feedthru capacitor C511 (A, fig. 74).

h. With the local oscillator of the tuning unit disabled (*g* above), readjust the impulse generator coarse and fine output level control settings to again produce a 2-db indication on the panel meter. Record the sum of the two output level control settings: this is the rf intermodulation sensitivity.

i. Subtract the value of the rf intermodulation sensitivity (*h* above) from the reference sensitivity (*f* above) to determine the difference in db. This difference in settings for the impulse generator output level controls must be the same or higher than the values shown in the following chart:

Tuning unit under test	Minimum rf intermodulation (in db)
1	40
2	35
3	40
4	40 when operating in the 400-700-mc range
4	30 when operating in the 700-1,000-mc range

j. Repeat the procedures given in *e* through *i* above for the high-frequency end of the band under test; then check at two other equally spaced frequency points within the band.

k. Repeat the procedures in *e* through *j* for each band of the tuning unit under test.

110. Calibration as Two-Terminal RF Voltmeter

This procedure is used to calibrate the test set as a two-terminal rf voltmeter. Set up the equipment as shown in figure 94; however, use the 10-db pad instead of the 5-db variable step attenuator. The 10-db pad can be connected directly to the tuning unit signal generator.

a. If tuning units 1, 2, or 3, are used, connect the applicable tuning unit signal generator (recently calibrated for power output) to the test set and proceed as follows:

(1) Set the function switch to CW AVERAGE and the calibration switch to SERIES CAL & OPERATE.

(2) If tuning unit 1 is used, set the SIGNAL ATTENUATOR switch to 0 CW ONLY; if tuning units 2 or 3 are used set the SIGNAL ATTENUATOR switch to 20 DB.

(3) Set the tuning unit signal generator output level to produce a 10-microvolt signal at the SIGNAL INPUT terminal of the test set for tuning unit 1, or a 100 microvolt signal for tuning units 2 or 3.

Note: If the 10-db pad is too large to provide a signal of proper amplitude at the test set SIGNAL INPUT terminal, use a pad of a smaller value (AT-50-8) to produce the proper signal amplitude.

(4) Adjust the GAIN control to obtain a 20-db reading on the test set panel meter.

(5) Set the function switch to CW PEAK and the calibration switch to SHUNT CAL.

(6) Set the IMPULSE GENERATOR DB ABOVE 1μV/MC switch to ON and adjust the impulse generator output controls (coarse and fine) to again obtain a 20-db reading on the test set panel meter.

(7) Record the settings of the impulse

generator output controls on calibration charts 4A and 4B which are located on pages 8 and 9 of the condensed plastic laminated operating instructions supplied with each test set, unless these settings are identical with those already shown.

(8) Repeat the procedures given in (1) through (5) above for each frequency shown on calibration charts 4A and 4B.

b. If tuning unit 4 is used, set up the equipment as shown in figure 103 and proceed as follows:

(1) Set the READ-CALIBRATE switch on the switching unit to READ and adjust the output level of the tuning unit 4 signal generator to obtain an indication of 100,000 microvolts on the power meter (See note in *a* above.)

(2) Set the READ-CALIBRATE switch on the switching unit to CALIBRATE, and the 20-db variable step attenuator controls to 60 DB.

(3) Set the test set function switch to CW AVERAGE and the calibration switch to SERIES CAL & OPERATE.

(4) Set the SIGNAL ATTENUATOR switch to 20 DB.

(5) Adjust the GAIN control for a reading of 20 db on the test set panel meter.

(6) Set the test set function switch to CW PEAK and the calibration switch to SHUNT CAL.

(7) Set the IMPULSE GENERATOR DB ABOVE 1μV/MC switch to ON and adjust the impulse generator output controls (coarse and fine) to again obtain a reading of 20 db on the test set panel meter.

(8) Record the settings of the impulse generator output controls on charts 4A and 4B, unless the settings are identical with those already shown.

(9) Repeat the procedures given in (1) through (8) above for each frequency shown (for tuning unit 4) on calibration on charts 4A and 4B.

111. Bandwidth Determination

To check the impulse bandwidth of the test set, compare the impulse bandwidth limits shown in the chart below with the impulse generator output settings obtained in paragraph 110 above. The following chart indicates the impulse bandwidth limits. The settings recorded in the IMPULSE GENERATOR DB ABOVE 1μV/MC columns of calibration charts 4A and 4B of the condensed operating instructions, supplied with each test set, shall fall within impulse bandwidth limits in the chart below.

Tuning unit	Band (mc)	Impulse bandwidth (db)
1	0.15-0.36	63-70
	0.36-0.87	57-64
	0.87-2.1	57-64
	2.1-5.2	57-64
	5.2-12.7	55-61
	12.7-30	55-61
2	20-70	59-65
	70-220	59-65
3	200-400	46-61
4	400-700	44-49
	700-1,000	44-49

112. RF-IF. Attenuator Test

Connect the applicable tuning unit signal generator, through the cable supplied with it, or a 2-foot RG-5B/U coaxial cable terminated by two UG-18/U connectors, to the INPUT connector of the 20-db variable step attenuator (AT-106H) shown in figure 103. Connect the OUTPUT of the 20-db variable step attenuator through a second RG-5B/U coaxial cable (as above) to the SIGNAL INPUT jack on the test set.

a. If the tuning unit is installed, proceed as follows:

(1) Set the 20-db variable step attenuator controls for an attenuation of 80 DB and the test set SIGNAL ATTENUATOR switch to 0 CW ONLY.

(2) Adjust the output of the tuning unit 1 signal generator to obtain a reading of 10 microvolts at the test set SIGNAL INPUT jack.

(3) Set the test set GAIN control for a

full-scale indication on the panel meter.

(4) Increase the test set SIGNAL ATTENUATOR switch setting by 20 db and decrease the 20-db variable step attenuator controls by 20 db. The reading on the test set panel meter should remain constant, within ±20 percent for each 20-db change in control settings.

(5) Repeat the procedure given in (4) above for each position of the SIGNAL ATTENUATOR switch up to the 80 DB position.

(6) Repeat the procedures given in (1) through (4) above at the low, middle, and high end of each band on the tuning unit.

b. If tuning units 2, 3, or 4 are installed, proceed as follows:

(1) Set the 20-db variable step attenuator controls for an attenuation of 60 DB and the test set SIGNAL ATTENUATOR switch to 20 DB.

(2) Adjust the output of the tuning unit signal generator to obtain 100 microvolts at the test set SIGNAL INPUT jack.

(3) Set the test set GAIN control for a full-scale indication on the panel meter.

(4) Set the test set SIGNAL ATTENUATOR switch to 0 CW ONLY and the 20-db variable step attenuator for an attenuation of 80 DB.

(5) Repeat the procedures given in *a* (4), (5), and (6) of *a* above.

113. Power Supply Test

a. Connect the test set through the isolation transformer (TF-248/G) to the power supply (VP-410), and perform as many of the final tests as are necessary to verify that the test set operates properly at each of the following frequencies and input voltages:

Frequencies	*Input voltages*
50 cps	100, 117, and 130 vac
60 cps	100, 117, and 130 vac
400 cps	100, 117, and 130 vac

b. Perform the final tests determined in *a* above with an input of 230 vac at a frequency of 60 cps.

COLOR CODE MARKING FOR MILITARY STANDARD RESISTORS

COMPOSITION-TYPE RESISTORS

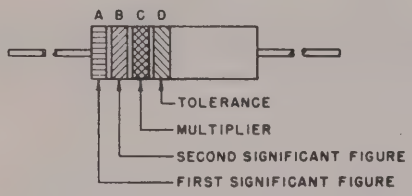

BAND A— Equal Width Band Signifies Composition-Type

WIREWOUND-TYPE RESISTORS

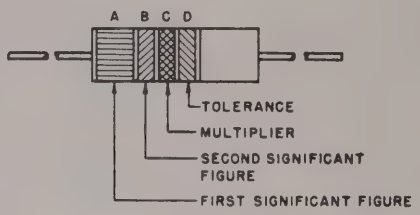

BAND A— Double Width Signifies Wire-wound Resistor

COLOR CODE TABLE

BAND A		BAND B		BAND C		BAND D*	
COLOR	FIRST SIGNIFICANT FIGURE	COLOR	SECOND SIGNIFICANT FIGURE	COLOR	MULTIPLIER	COLOR	RESISTANCE TOLERANCE (PERCENT)
BLACK	0	BLACK	0	BLACK	1		
BROWN	1	BROWN	1	BROWN	10		
RED	2	RED	2	RED	100		
ORANGE	3	ORANGE	3	ORANGE	1,000		
YELLOW	4	YELLOW	4	YELLOW	10,000	SILVER	± 10
GREEN	5	GREEN	5	GREEN	100,000	GOLD	± 5
BLUE	6	BLUE	6	BLUE	1,000,000		
PURPLE (VIOLET)	7	PURPLE (VIOLET)	7				
GRAY	8	GRAY	8	SILVER	0.01		
WHITE	9	WHITE	9	GOLD	0.1		

EXAMPLES OF COLOR CODING

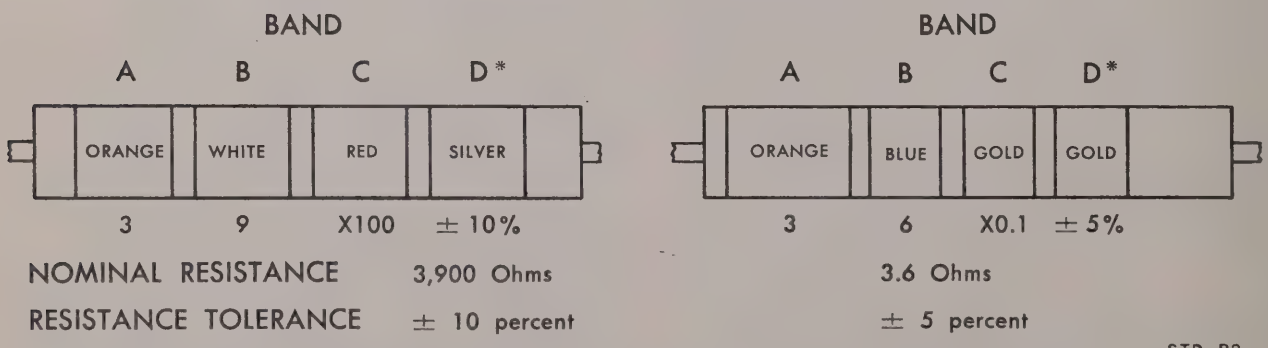

*If Band D is omitted, the resistor tolerance is ±20%, and the resistor is not Mil-Std.

Figure 96. MIL-STD resistor color-code markings.

and CB

APACITANCE TOLERANCE			CHARACTERISTIC[2]				DC WORKING VOLTAGE	OPERATING TEMP. RANGE	VIBRATION GRADE
CN	CY	CB	CM	CN	CY	CB	CM	CM	CM
	± 20%	± 20%		A				−55° to +70°C	10–55 cps
			B	E		B			
	± 2%	± 2%	C		C			−55° to +85°C	
± 30%			D			D	300		
			E					−55° to +125°C	10–2,000 cps
			F				500		
								−55° to +150°C	
	± 5%	± 5%							
± 10%	± 10%	± 10%							

Style CK

CAPACITANCE TOLERANCE	MIL ID
± 20%	
± 10%	
	CK

TABLE III – For use with Group III, Temperature Compensating, Style CC

COLOR	TEMPERATURE COEFFICIENT[4]	1st SIG FIG	2nd SIG FIG	MULTIPLIER[1]	CAPACITANCE TOLERANCE		MIL ID
					Capacitances over 10uuf	Capacitances 10uuf or less	
BLACK	0	0	0	1		± 2.0uuf	CC
BROWN	−30	1	1	10	± 1%		
RED	−80	2	2	100	± 2%	± 0.25uuf	
ORANGE	−150	3	3	1,000			
YELLOW	−220	4	4				
GREEN	−330	5	5		± 5%	± 0.5uuf	
BLUE	−470	6	6				
PURPLE (VIOLET)	−750	7	7				
GREY		8	8	0.01			
WHITE		9	9	0.1	± 10%		
GOLD	+100					± 1.0uuf	
SILVER							

nt (SIG) figures are multiplied to obtain the capacitance in uuf.

able specifications: MIL–C–5, MIL–C–91, MIL–C–11272, and MIL–C–10950 respectively.

perature limits designated in MIL–C–11015.

centigrade.

COLOR CODE MARKING FOR MILITARY STANDARD RESISTORS

COMPOSITION-TYPE RESISTORS

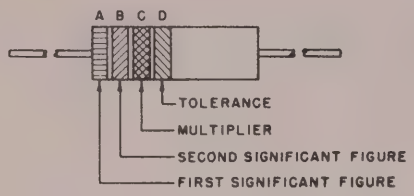

BAND A— Equal Width Band Signifies Composition-Type

WIREWOUND-TYPE RESISTORS

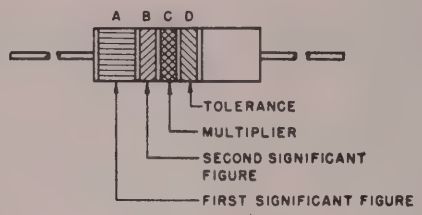

BAND A— Double Width Signifies Wire-wound Resistor

COLOR CODE TABLE

BAND A		BAND B		BAND C		BAND D*	
COLOR	FIRST SIGNIFICANT FIGURE	COLOR	SECOND SIGNIFICANT FIGURE	COLOR	MULTIPLIER	COLOR	RESISTANCE TOLERANCE (PERCENT)
BLACK	0	BLACK	0	BLACK	1		
BROWN	1	BROWN	1	BROWN	10		
RED	2	RED	2	RED	100		
ORANGE	3	ORANGE	3	ORANGE	1,000		
YELLOW	4	YELLOW	4	YELLOW	10,000	SILVER	± 10
GREEN	5	GREEN	5	GREEN	100,000	GOLD	± 5
BLUE	6	BLUE	6	BLUE	1,000,000		
PURPLE (VIOLET)	7	PURPLE (VIOLET)	7				
GRAY	8	GRAY	8	SILVER	0.01		
WHITE	9	WHITE	9	GOLD	0.1		

EXAMPLES OF COLOR CODING

BAND

A B C D*

3 9 X100 ± 10%

NOMINAL RESISTANCE 3,900 Ohms

RESISTANCE TOLERANCE ± 10 percent

BAND

A B C D*

3 6 X0.1 ± 5%

3.6 Ohms

± 5 percent

STD-R2

*If Band D is omitted, the resistor tolerance is ±20%, and the resistor is not Mil-Std.

Figure 96. MIL-STD resistor color-code markings.

COLOR CODE MARKING FOR MILITARY STANDARD CAPACITORS

GROUP I Capacitors, Fixed, Various-Dielectrics, Styles CM, CN, CY, and CB

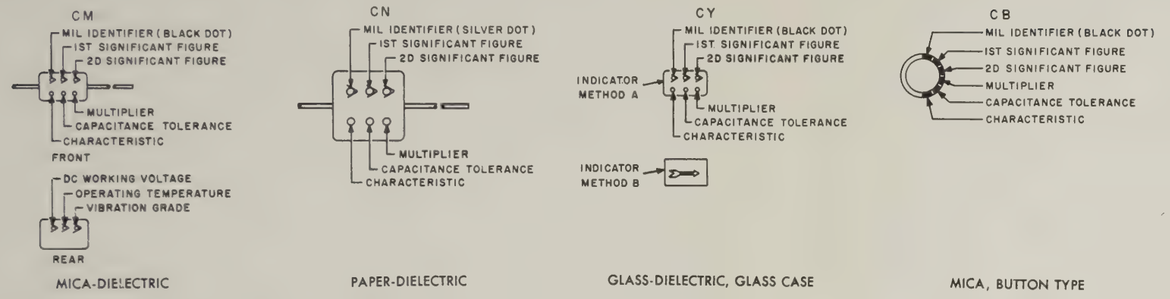

GROUP II Capacitors, Fixed Ceramic-Dielectric (General Purpose) Style CK

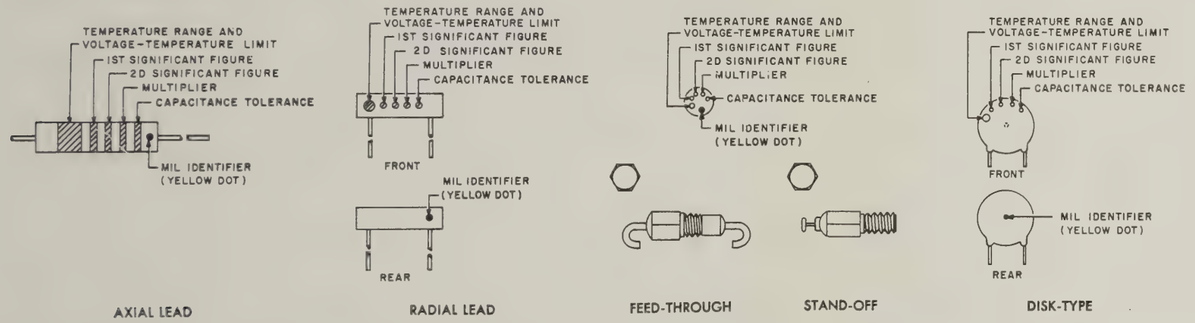

GROUP III Capacitors, Fixed, Ceramic-Dieletric (Temperature Compensating) Style CC

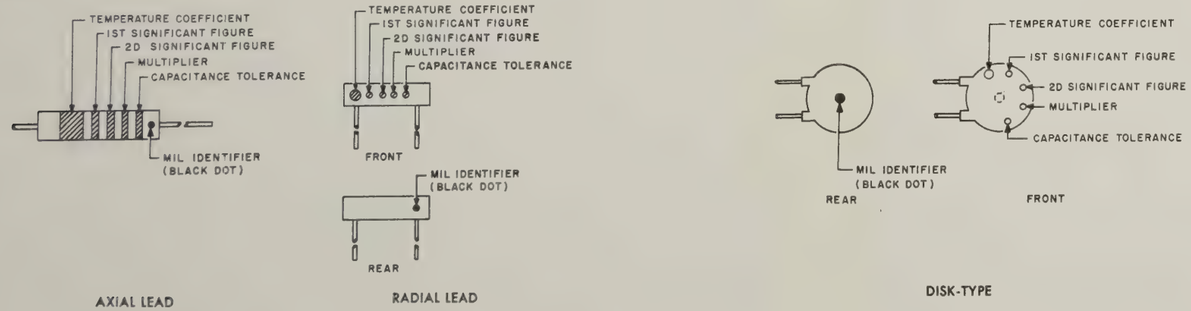

COLOR CODE TABLES

TABLE I – For use with Group I, Styles CM, CN, CY and CB

COLOR	MIL ID	1st SIG FIG	2nd SIG FIG	MULTIPLIER[1]	CAPACITANCE TOLERANCE				CHARACTERISTIC[2]				DC WORKING VOLTAGE	OPERATING TEMP. RANGE	VIBRATION GRADE
					CM	CN	CY	CB	CM	CN	CY	CB	CM	CM	CM
BLACK	CM, CY CB	0	0	1			± 20%	± 20%		A				−55° to +70°C	10–55 cps
BROWN		1	1	10					B	E		B			
RED		2	2	100	± 2%		± 2%	± 2%	C		C			−55° to +85°C	
ORANGE		3	3	1,000		± 30%			D			D	300		
YELLOW		4	4	10,000					E					−55° to +125°C	10–2,000 cps
GREEN		5	5		± 5%				F				500		
BLUE		6	6											−55° to +150°C	
PURPLE (VIOLET)		7	7												
GREY		8	8												
WHITE		9	9												
GOLD				0.1			± 5%	± 5%							
SILVER	CN				± 10%	± 10%	± 10%	± 10%							

TABLE II – For use with Group II, General Purpose, Style CK

COLOR	TEMP. RANGE AND VOLTAGE – TEMP. LIMITS[3]	1st SIG FIG	2nd SIG FIG	MULTIPLIER[1]	CAPACITANCE TOLERANCE	MIL ID
BLACK		0	0	1	± 20%	
BROWN	AW	1	1	10	± 10%	
RED	AX	2	2	100		
ORANGE	BX	3	3	1,000		
YELLOW	AV	4	4	10,000		CK
GREEN	CZ	5	5			
BLUE	BV	6	6			
PURPLE (VIOLET)		7	7			
GREY		8	8			
WHITE		9	9			
GOLD						
SILVER						

TABLE III – For use with Group III, Temperature Compensating, Style CC

COLOR	TEMPERATURE COEFFICIENT[4]	1st SIG FIG	2nd SIG FIG	MULTIPLIER[1]	CAPACITANCE TOLERANCE		MIL ID
					Capacitances over 10uuf	Capacitances 10uuf or less	
BLACK	0	0	0	1		± 2.0uuf	CC
BROWN	−30	1	1	10	± 1%		
RED	−80	2	2	100	± 2%	± 0.25uuf	
ORANGE	−150	3	3	1,000			
YELLOW	−220	4	4				
GREEN	−330	5	5		± 5%	± 0.5uuf	
BLUE	−470	6	6				
PURPLE (VIOLET)	−750	7	7				
GREY		8	8	0.01			
WHITE		9	9	0.1	± 10%		
GOLD	+100					± 1.0uuf	
SILVER							

1. The multiplier is the number by which the two significant (SIG) figures are multiplied to obtain the capacitance in uuf.
2. Letters indicate the Characteristics designated in applicable specifications: MIL–C–5, MIL–C–91, MIL–C–11272, and MIL–C–10950 respectively.
3. Letters indicate the temperature range and voltage-temperature limits designated in MIL–C–11015.
4. Temperature coefficient in parts per million per degree centigrade.

STD–C2

Figure 97. MIL-STD capacitor color-code markings.

APPENDIX

REFERENCES

Following is a list of references applicable and available to the field and depot maintenance repairman of Radio Interference Measuring Set AN/URM-85.

DA Pamphlet 310-4	Index of Technical Manuals, Technical Bulletins, Supply Bulletins, Lubrication Orders, and Modification Work Orders.
TB SIG 225	Radioactive Electron Tube Handling.
TM 11-1242	Crystal Rectifier Test Sets TS-268/U, TS-268A/U, TS-268B/U, TS-268C/U, TS-268D/U, and TS-268E/U.
TM 11-5030A	Signal Generators TS-497B/URR and TS-497C/URR.
TM 11-5527	Multimeters TS-352/U, TS-352A/U, and TS-352B/U.
TM 11-5551-D	R.F. Signal Generator Set AN/URM-25D.
TM 11-6625-200-12	Operation and Organizational Maintenance: Multimeter ME-26B/U.
TM 11-6625-261-12	Operator's and Organizational Maintenance Manual: Audio Oscillators TS-382A/U, TS-382B/U, TS-382D/U, TS-382E/U, and TS-382F/U.
TM 11-6625-274-12	Operator's and Organizational Maintenance Manual: Test Sets, Electron Tube TV-7/U, TV-7A/U, TV-7B/U, and TV-7D/U.
TM 11-6625-280-15	Organizational, Field and Depot Maintenance Manual: Signal Generators AN/URM-49, AN/URM-49A, AN/URM-49B, and AN/URM-49C.
TM 11-6625-316-12	Operator and Organizational Maintenance Manual: Test Sets, Electron Tube TV-2/U, TV-2A/U, and TV-2B/U.
TM 11-6625-320-12	Operator's and Organizational Maintenance Manual: Voltmeter, Meter ME-30A/U and Voltmeters, Electronic ME-30B/U and ME-30C/U.
TM 11-6625-351-12	Operator and Organizational Maintenance Manual: Radio Interference Measuring Set AN/URM-85.
TM 11-6625-351-20P	Organizational Maintenance Repair Parts and Special Tools List: Radio Interference Measuring Set AN/URM-85.
TM 11-6625-351-35P	Field and Depot Repair Parts and Special Tools List for Interference Measuring Set AN/URM-85.

	Paragraph	Page
Alignment:		
Signal generator for tuning unit 1	82*a*	191
Signal generator for tuning unit 4	82*b*	191
Special test equipment required for	82	191
Uhf wavemeter	82*c*	191
Alignment, tuning unit 1:		
If. amplifier	84-86	192-193
Rf tuner	87	194
Alignment, tuning unit 2:		
If. amplifier	88-89	197
Rf tuner	91	200
Alignment, tuning unit 3:		
If. amplifier	92,93	202,203
Rf tuner	94	204
Alignment, tuning unit 4:		
If. amplifier	95-97	208-209
700-1,000-mc tuner	98	213
Antenna AT-1030/URM-85, theory	60*e*	86
Audio amplifier, theory	14	16
Audio detector V1	33	47
Basic methods of measurement:		
Direct reading	6*a*	9
Substitution method	6*b*	10
Block diagrams:		
Audio amplifier	9	11
Cathode follower and metering circuit	10	11
Main unit	8	11
Power supply	13	14
Rf input and inpulse generator circuit	11	11
Series method of calibration	5	7
Shunt method of calibration with incoming rf signal	4	6
Tuners, rf, tuning unit 4, analysis	50*a*	71
Tuning unit 1	25	35
Tuning unit 2	34	47
Tuning unit 3	42	59
Tuning unit 4	50	69
Cable Assembly, Power, Electrical CX-6680/U	61*d*	88
Cable Assembly Set, Electrical MX-3410/URM-85	61*c*	88
Cable Assembly, Special Purpose, Electrical Branched CX-6681/URM-85	61*e*	88
Chart, troubleshooting	67*a*	107
Checking B+ and filament circuits	66	106
Circuit analysis, static condition, tuning unit 4:		
400-700-mc rf tuner	53*b*	77
700-1,000-mc rf tuner	51*b*	71
Coaxial relays and attenuators, theory	24	33
Conditions for tests in B+ and filament circuits	66*b*	106
Coupler, Antenna CU-890/URM-85:		
Repair	76	166
Theory	59*b*	82
Coupler, Radio Frequency Interference CU-891/URM-85:		
Repair	76	166
Theory	59*d*	83
Coupler, Radio Frequency Interference CU-892/URM-85:		
Repair	76	166
Theory	59*e*	85
Coupler, Antenna CU-893/URM-85, theory of	60*c*	86
Coupler, Antenna CU-894/URM-85, theory of	60*d*	86
Coupler, Antenna CU-895/URM-85, theory of	60*b*	85
Coupler, Radio Frequency Interference CU-896/URM-85, theory of	60*g*	87
Coupler, Radio Frequency Interference CU-897/URM-85, theory of	60*h*	87
Crystal mixer:		
Tuning unit 3	42*c*, 45	59, 63
Tuning unit 4	52*d*, 54	75, 78
CW AVERAGE position of function switch	18	23
CW PEAK position of function switch	19	25
Dc resistances:		
Transformers and coils	69	152
Tuning unit multipin connectors	68	152
Detector and electrometer circuit, theory of	25*j*	35
Direct reading, basic methods of measurements	6*a*	9
Discone (broadband) Antenna AS-1158/URM-85, theory of	60*a*	85
Electrometers V3 and V4:		
Circuit description	32*d*	46
Dynamic condition	32*c*	44
Fifth echelon level maintenance	65*b*	93
Filament voltages and ±450-volt adjustments	83	191
Final testing:		
Audio amplifier response	102	219
Bandwidth determination	111	226
Calibration as a two-terminal rf voltmeter	110	225
Cw sensitivity	105	222
Dial calibration accuracy	101	219
If. rejection	108	224
Impulse noise sensitivity	106	223
Interference measurements	104	221
Linearity	103	220
Power supply test	113	227
Purpose	99	217
Rf intermodulation	109	224
Rf-if. attenuator test	112	226
Test equipment required	100	217
First audio amplifier stage analysis	16*a*	21
Fourth echelon level maintenance	65*a*	93
Function switch S702, positions:		
CW AVERAGE	18	23
CW PEAK	19	25
METERED SLIDEBACK	22	29
PULSE PEAK	21	26
ZERO ADJ	20	25

	Paragraph	Page
If. amplifier:		
Detailed analysis:		
Tuning unit 3	48	67
Tuning unit 4	57	80
Detailed analysis, tuning unit 2:		
V207 and V208	40*b*	57
V209 and V210	40*c*	57
V211, cathode follower	40*d*	58
V4 for tuning unit 1	30*b*	42
V5 through V7	30*c*	42
V8	29*b*	42
V9 through V11	29*c*	42
If. input selector, detailed analysis, tuning unit 1	27	39
If. output selector, theory	31	44
If. preamplifier, detailed analysis:		
Tuning unit 3	46	64
Tuning unit 4	55	79
If. step attenuator:		
AT201, theory	39	54
Detailed analysis, tuning unit 1	28	41
Theory, tuning unit 1	28*a*	41
Impulse generator circuit:		
Impulse generator assembly G701	23*c*	32
Impulse generator driver V703B	23*b*	32
Repetition rate for generator V703A	23*a*	31
Indicating circuits and power supply	3*d*	5
Introduction to unit theory	7	10
Key to identifying terminals on if. transformer	69*b*	152
Localization of troubles	64*c*	91
Loop Antenna AT-1026/URM-85:		
Repairs	76*e*	172
Theory	59*a*	81
Measurements for troubleshooting test set	66*c*	106
Meter cathode follower V702 and metering circuit	17	22
Theory	17*a*	22
Meter detector and electrometer circuit, detailed analysis	32	44
METERED SLIDEBACK position of function switch	22	29
Meter sensitivity circuit	12*c*	14
Minor components for use with tuning unit 1:		
Coupler, Antenna CU-890/URM-85	59*b*	82
Coupler, Radio Frequency Interference CU-891/URM-85	59*d*	83
Coupler, Radio Frequency Interference CU-892/URM-85	59*e*	85
Loop Antenna AT-1026/URM-85	59*a*	81
Probe, Magnetic Field, Interference Measuring MX-3409/URM-85	59*c*	83
Minor components for use with tuning units 2, 3, and 4:		
Antenna AT-1030/URM-85	60*e*	86
Coupler, Antenna CU-893/URM-85	60*c*	86
Coupler, Antenna CU-894/URM-85	60*d*	86
Coupler, Antenna CU-895/URM-85	60*b*	85
Coupler, Radio Frequency Interference CU-896/URM-85	60*g*	87
Coupler, Radio Frequency Interference CU-897/URM-85	60*h*	87
Discone (broadband) Antenna AS-1158/URM-85	60*a*	85
Probe, Magnetic Field, Interference Measuring MX-3412/URM-85	60*f*	87
Minor electrical components for use with all tuning units:		
Cable Assembly, Power Electrical CX-6680/U	61*d*	88
Cable Assembly Set, Electrical MX-3410/URM-85	61*c*	88
Cable Assembly Special Purpose, Electrical Branched CX-6681/URM-85	61*e*	88
Multimeter, Remote ME-204/URM-85	61*b*	88
Probe, Electrical Field, Interference Measuring MX-3411/URM-85	61*a*	87
Multimeter, Remote ME-204/URM-85	61*b*	88
Oscillators:		
V3, tuning unit 1	26*d*	39
V203B, tuning unit 2	36*b*	51
V206B, tuning unit 2	38*b*	53
V402, tuning unit 3	44	62
V502, tuning unit 4	52*c*	75
V504, tuning unit 4	54*c*	78
Overall gain measurements	75	164
If. amplifiers	75*b*	165
Rf tuner	75*c*	165
Physical description:		
400-700-mc rf tuner	53*a*	76
700-1,000-mc rf tuner	51*a*	71
Power supplies, block diagrams:		
+1.2 volts	13*e*	15
+6 volts	13*f*	15
+105 volts	13*c*	14
-150 volts	13*d*	14
±300 volts	13*g*	15
Power supplies, detailed analysis:		
1.2 volts	24*d*, *e*	34
5.8 volts	24*f*	34
+6 volts	24*c*	33
6.3 volts ac	24*g*	35
+105 volts	24*a*	33
+150 volts	24*a*	33
±300 volts	24*h*	35
-150 volts	24*b*	33
Power supply, analysis of input circuits, main unit	23	31
Power supply, analysis of output circuits, main unit	24	33
Preamplifier:		
Tuning unit 3	42*d*	59
Tuning unit 4	50*b*	71
Probe, Electrical Field, Interference Measuring MX-3411/URM-85, theory	61*a*	87
Probe, Magnetic Field, Interference Measuring MX-3409/URM-85, theory	59*c*	83

	Paragraph	Page
Probe, Magnetic, Interference Measuring MX-3412/URM-85, theory	60*f*	86
PULSE PEAK position of function switch	9	11
Regulating circuit, power supply	23*c*	32
Relay K4 coil circuit, tuning unit 1:		
K3 circuit	28*c*	41
K4 circuit	28*b*	41
K5 circuit	28*e*	41
Repetition rate generator V703A, theory	23*a*	31
Replacement of parts, minor components for tuning unit 1:		
Coupler, Antenna CU-890/URM-85 for vertical antenna	76*d*	168
Coupler, Radio Frequency Interference CU-891/URM-85	76*b*	166
Coupler, Radio Frequency Interference CU-892/URM-85	76*c*	167
General	76*a*	166
Loop Antenna AT-1026/URM-85	76*e*	172
Replacement of parts, minor components for tuning units 2, 3, and 4:		
Couplers, Antenna CU-893/URM-85 and CU-894/URM-85	77*d*	175
50-ohm Coupler, Radio Frequency Interference CU-896/URM-85	77*b*	172
500-ohm Coupler, Radio Frequency Interference CU-897/URM-85	77*c*	175
General	77*a*	172
Rf tuner:		
Analysis of 20-70-mc band, tuning unit 2	35,36	48,51
Analysis of 70-220-mc band, tuning unit 2	37,38	52
Detailed analysis, tuning unit 1	26	37
Sectionalization of troubles:		
Operational tests	64*b* (2)	91
Visual inspection	64*b* (1)	91
SERIES CAL & OPERATE position of coaxial relays and attenuators, theory	24*a*	33
SHUNT CAL position of coaxial relays and attenuators, theory of	24*b*	33
Signal and power paths for detector and electrometer circuit	32*e*	46
Signal flow, block diagram	5*b*	7
Signal generator for aligning:		
Tuning unit 1	82*a*	191
Tuning units 2 and 3	81*a*	190
Tuning unit 4	82*b*	191
Signal pickup device, block diagram	4*a*	6
Signal substitution:		
Charts	70*b*	154
Technique	70	154
Substitution method, basic methods of measurement	6*b*	10
System block diagram	1-5	2-7
Television tuning wand, use of:		
70-220-mc band	90*a*	199
200-400-mc band	90*b*	199
Test equipment required for:		
Final testing	100	217
Troubleshooting	65	93
Testing, final:		
Audio amplifier response	102	219
Bandwidth determination	109	224
Cw sensitivity	105	222
Equipment required	100	217
If. rejection	108	224
Image rejection	107	223
Impulse noise sensitivity	106	223
Interference measurement	104	221
Linearity	103	220
Purpose	99	217
Rf intermodulation	110	225
Transformers and coils, resistances	69*a*	152
Transformer, Power, Isolation and Step-Down TF-248/U, theory of	62	89
Troubleshooting procedures:		
Charts	67*c*	107
Conditions	67*b*	107
General	64*a*	91
Instructions	63	91
Introduction	67*a*	107
Localization	64*c*	91
Sectionalization	64*b*	91
Tuning unit and indicating circuits, block diagram	4*c*	7
Tuning unit 1, signal substitution	71	155
Check of 455-kc and 1,600-kc if. amplifier	71*b*	155
If. chart	71*a*	155
Rf chart	71*c*	156
Tuning unit 2, signal substitution	72	158
If. chart	72*a*	158
If. test procedure	72*b*	159
Rf chart	72*c*	159
Tuning unit 3, signal substitution	73	160
If. chart	73*a*	160
If. test procedure	73*b*	160
Rf chart	73*c*	161
Tuning unit 4, signal substitution	74	162
If. chart	74*a*	162
If. test procedure	74*b*	162
Rf chart	74*c*	163
Uhf wavemeter required for alignment	82*c*	191
Vibrating-type regulator K703, main unit	23*b*	32
When to test for B+ and filament circuits	56*a*	106

Schematic main unit

	Paragraph	Page
Probe, Magnetic, Interference Measuring MX-3412/URM-85, theory	60*f*	86
PULSE PEAK position of function switch	9	11
Regulating circuit, power supply	23*c*	32
Relay K4 coil circuit, tuning unit 1:		
K3 circuit	28*c*	41
K4 circuit	28*b*	41
K5 circuit	28*e*	41
Repetition rate generator V703A, theory	23*a*	31
Replacement of parts, minor components for tuning unit 1:		
Coupler, Antenna CU-890/URM-85 for vertical antenna	76*d*	168
Coupler, Radio Frequency Interference CU-891/URM-85	76*b*	166
Coupler, Radio Frequency Interference CU-892/URM-85	76*c*	167
General	76*a*	166
Loop Antenna AT-1026/URM-85	76*e*	172
Replacement of parts, minor components for tuning units 2, 3, and 4:		
Couplers, Antenna CU-893/URM-85 and CU-894/URM-85	77*d*	175
50-ohm Coupler, Radio Frequency Interference CU-896/URM-85	77*b*	172
500-ohm Coupler, Radio Frequency Interference CU-897/URM-85	77*c*	175
General	77*a*	172
Rf tuner:		
Analysis of 20-70-mc band, tuning unit 2	35,36	48,51
Analysis of 70-220-mc band, tuning unit 2	37,38	52
Detailed analysis, tuning unit 1	26	37
Sectionalization of troubles:		
Operational tests	64*b* (2)	91
Visual inspection	64*b* (1)	91
SERIES CAL & OPERATE position of coaxial relays and attenuators, theory	24*a*	33
SHUNT CAL position of coaxial relays and attenuators, theory of	24*b*	33
Signal and power paths for detector and electrometer circuit	32*e*	46
Signal flow, block diagram	5*b*	7
Signal generator for aligning:		
Tuning unit 1	82*a*	191
Tuning units 2 and 3	81*a*	190
Tuning unit 4	82*b*	191
Signal pickup device, block diagram	4*a*	6
Signal substitution:		
Charts	70*b*	154
Technique	70	154
Substitution method, basic methods of measurement	6*b*	10
System block diagram	1-5	2-7
Television tuning wand, use of:		
70-220-mc band	90*a*	199
200-400-mc band	90*b*	199
Test equipment required for:		
Final testing	100	217
Troubleshooting	65	93
Testing, final:		
Audio amplifier response	102	219
Bandwidth determination	109	224
Cw sensitivity	105	222
Equipment required	100	217
If. rejection	108	224
Image rejection	107	223
Impulse noise sensitivity	106	223
Interference measurement	104	221
Linearity	103	220
Purpose	99	217
Rf intermodulation	110	225
Transformers and coils, resistances	69*a*	152
Transformer, Power, Isolation and Step-Down TF-248/U, theory of	62	89
Troubleshooting procedures:		
Charts	67*c*	107
Conditions	67*b*	107
General	64*a*	91
Instructions	63	91
Introduction	67*a*	107
Localization	64*c*	91
Sectionalization	64*b*	91
Tuning unit and indicating circuits, block diagram	4*c*	7
Tuning unit 1, signal substitution	71	155
Check of 455-kc and 1,600-kc if. amplifier	71*b*	155
If. chart	71*a*	155
Rf chart	71*c*	156
Tuning unit 2, signal substitution	72	158
If. chart	72*a*	158
If. test procedure	72*b*	159
Rf chart	72*c*	159
Tuning unit 3, signal substitution	73	160
If. chart	73*a*	160
If. test procedure	73*b*	160
Rf chart	73*c*	161
Tuning unit 4, signal substitution	74	162
If. chart	74*a*	162
If. test procedure	74*b*	162
Rf chart	74*c*	163
Uhf wavemeter required for alignment	82*c*	191
Vibrating-type regulator K703, main unit	23*b*	32
When to test for B+ and filament circuits	66*a*	106

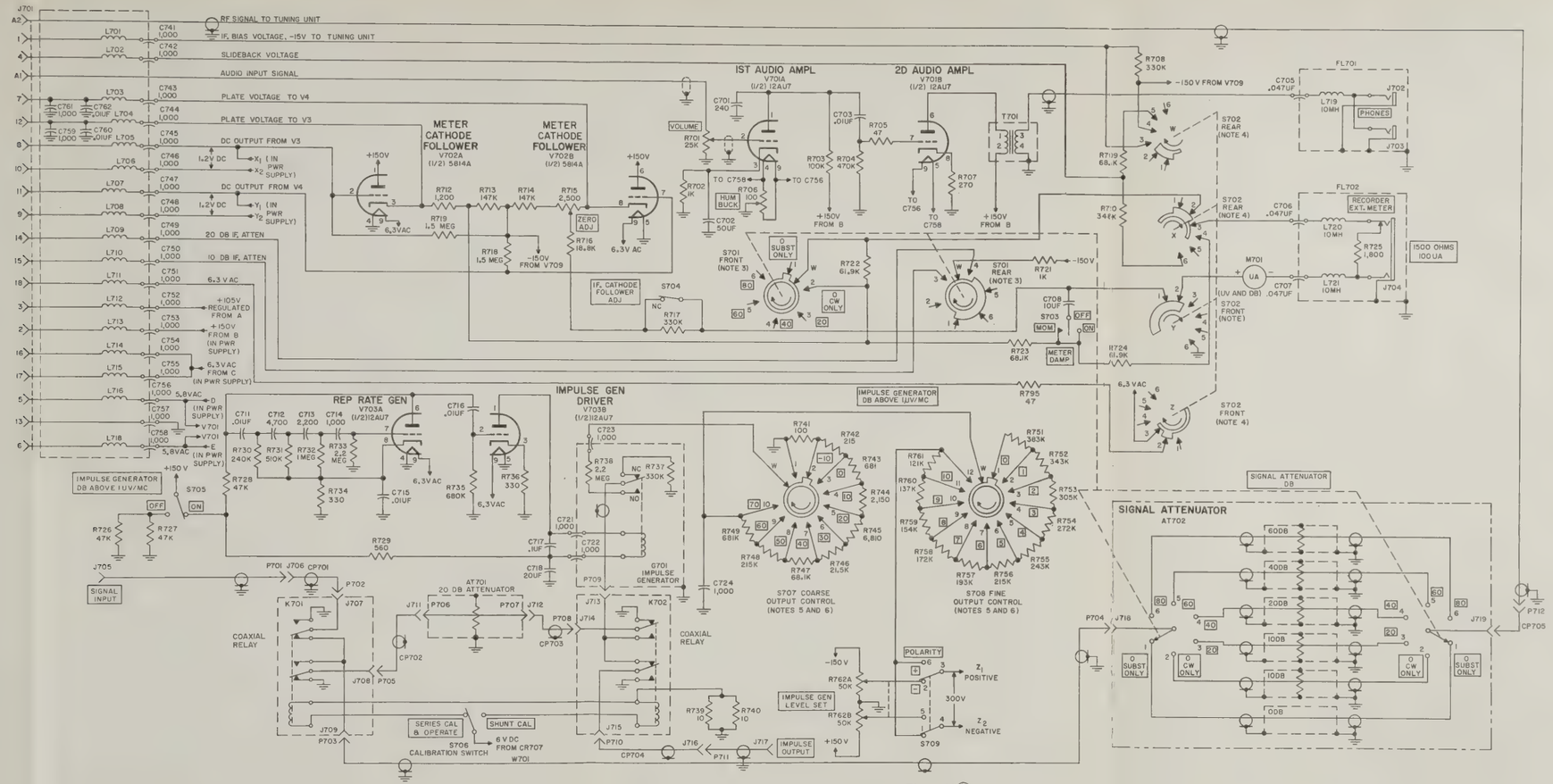

Figure 98(1). Main unit, schematic diagram (part 1 of 2).

NOTES:

1. UNLESS OTHERWISE INDICATED; RESISTANCE VALUES ARE IN OHMS, CAPACITANCE VALUES ARE IN MICROMICROFARADS (UUF).
2. [ ] INDICATES EQUIPMENT MARKING.
3. S701 WAFER SWITCH SEGMENTS ARE GANGED TO [SIGNAL ATTENUATOR DB] CONTROL AND ARE IN POSITION SHOWN:

SIGNAL ATTENUATOR DB

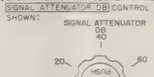

SEGMENTS ARE VIEWED FROM KNOB END.

4. S702 WAFER SWITCH SEGMENTS ARE PART OF FUNCTION SWITCH AND ARE IN POSITION SHOWN:

ZERO ADJ

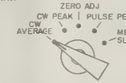

SEGMENTS ARE VIEWED FROM KNOB END AND ARE IDENTIFIED BY W, X, Y, Z.

5. S707 AND S708 WAFER SWITCH SEGMENTS ARE PART OF [IMPULSE GENERATOR DB ABOVE 1UV/MC] OUTPUT CIRCUIT AND ARE IN POSITION SHOWN:

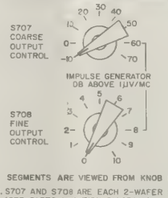

SEGMENTS ARE VIEWED FROM KNOB END.

6. S707 AND S708 ARE EACH 2-WAFER SWITCHES. (SEE PARTS LOCATION DIAGRAM.)

[SIGNAL ATTENUATOR DB] WAFER SWITCH S701

SWITCH POSITION	CONTACTS MADE	
	FRONT	REAR
O SUBST ONLY	NO CONTACT	NO CONTACT
O CW ONLY	WIPER W, AND PIN 2 R722 SHORT-CIRCUITED.	NO CONTACT
20	NO CONTACT	WIPER (W) AND PIN 3
40	NO CONTACT	WIPER (W), PINS 3 AND 4
60	NO CONTACT	WIPER (W), PINS 3, 4, AND 5
80	NO CONTACT	WIPER (W), PINS 3, 4, 5, AND 6

FUNCTION SWITCH S702

SWITCH POSITION	CONTACTS MADE			
	FRONT		REAR	
	Y SEGMENT	Z SEGMENT	W SEGMENT	X SEGMENT
CW AVERAGE	PINS 1 AND 2	PINS 2 AND 3	NO CONTACT	PINS 2 AND 3
CW PEAK	PINS 1 AND 2	NO CONTACT	NO CONTACT	PINS 2 AND 3
ZERO ADJ	PINS 1 AND 2	NO CONTACT	PINS 3 AND 4	PINS 3 AND 4
PULSE PEAK	PINS 1 AND 2	NO CONTACT	PINS 4 AND 5	PINS 3 AND 4
METERED SLIDEBACK	PINS 2 AND 6	NO CONTACT	PINS 4 AND 5	PINS 3 AND 6

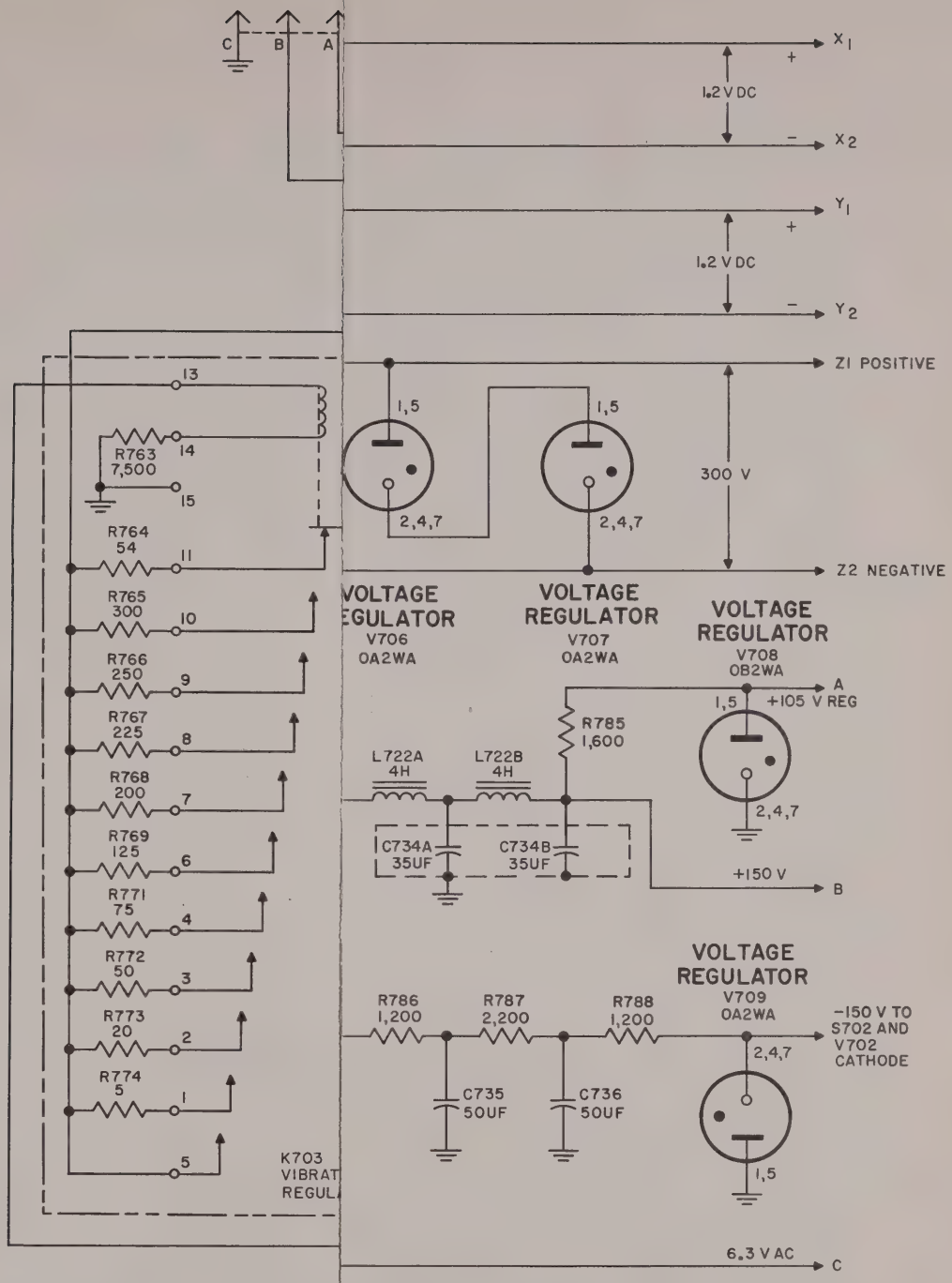

NOTES:
1. BRADLEY SEMICONDUCTOR PART NO.
2. IRC PART NO.

TM6625-351-35-86②

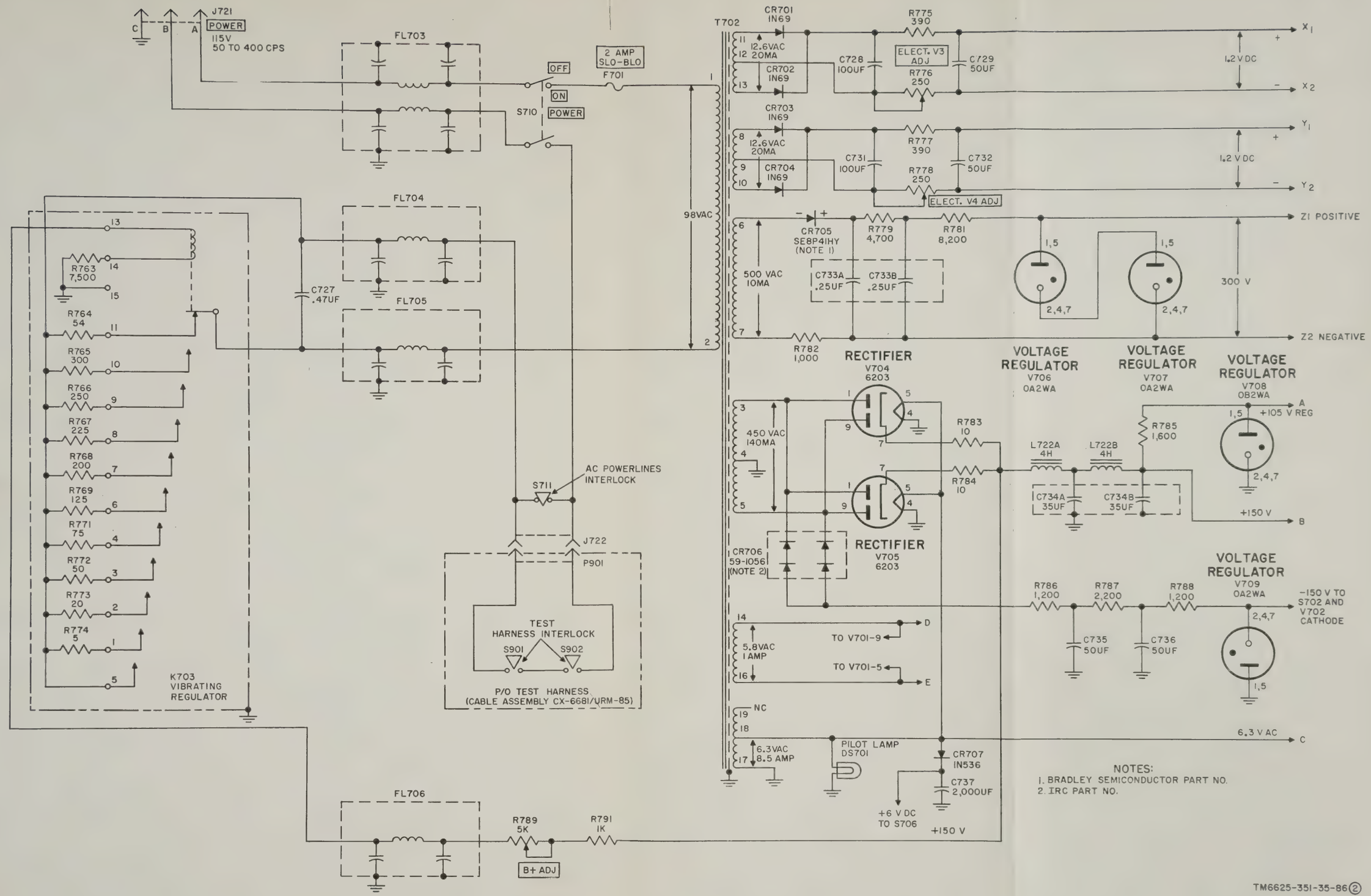

Figure 98(2). Main unit schematic diagram (part 2 of 2).

TM6625-351-35-86(2)

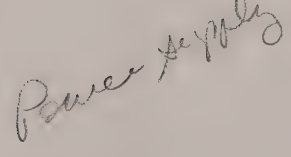
Power Supply

Tuning unit #1

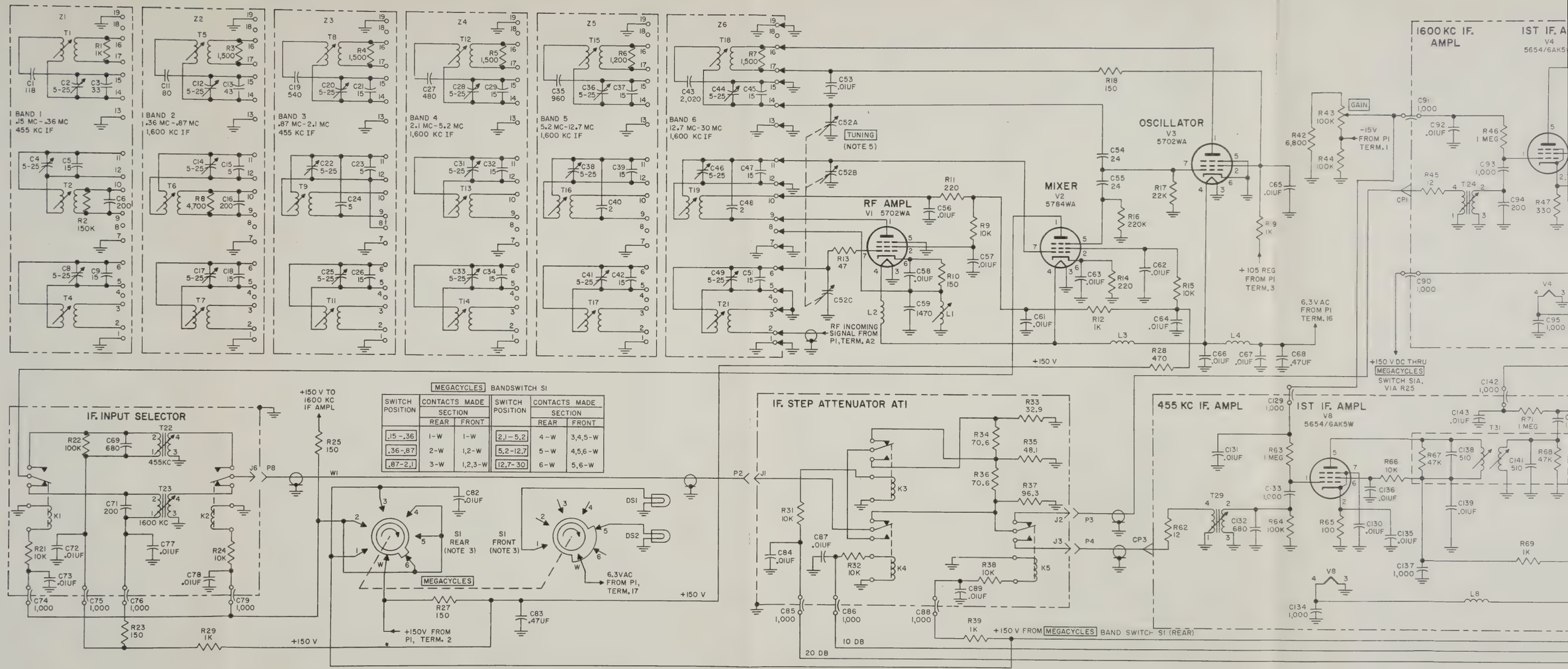

SWITCH POSITION	CONTACTS MADE SECTION REAR	CONTACTS MADE SECTION FRONT	SWITCH POSITION	CONTACTS MADE SECTION REAR	CONTACTS MADE SECTION FRONT
.15 - .36	1-W	1-W	2.1 - 5.2	4-W	3,4,5-W
.36 - .87	2-W	1,2-W	5.2 - 12.7	5-W	4,5,6-W
.87 - 2.1	3-W	1,2,3-W	12.7 - 30	6-W	5,6-W

Figure 99. Tuning unit 1, schematic diagram.

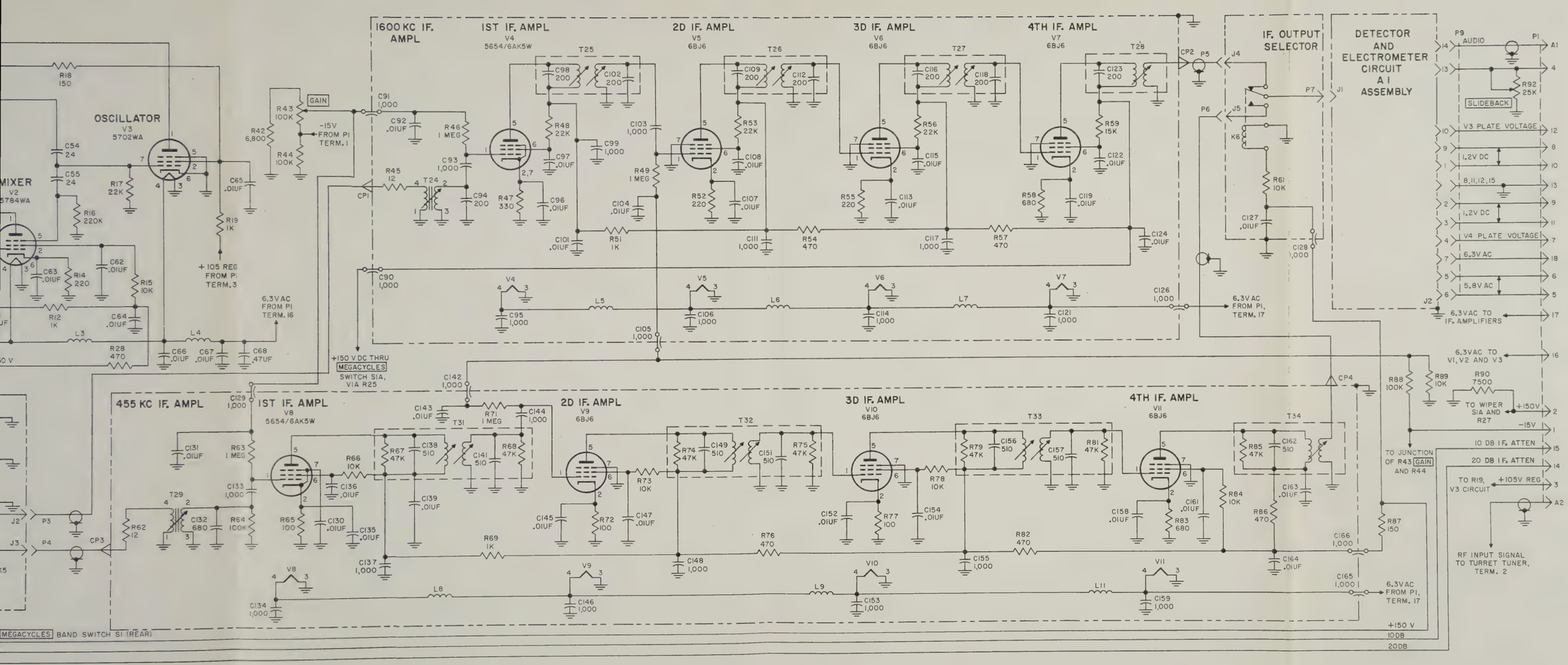

NOTES:

1. UNLESS OTHERWISE INDICATED; RESISTANCE VALUES ARE IN OHMS, CAPACITANCE VALUES ARE IN MICROMICROFARADS.
2. ▭ INDICATES EQUIPMENT MARKING.
3. WAFER SWITCH SEGMENTS ARE PART OF MEGACYCLES SWITCH S1 AND ARE IN POSITION 1 AS SHOWN:

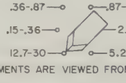

SEGMENTS ARE VIEWED FROM KNOB END.

4. P1 MATES WITH J701 IN MAIN UNIT.

5. TOTAL TUNING CAPACITY IS 0-281.4 UUF.

TM6625-351-35-87

Figure 99. Tuning unit 1, schematic diagram.

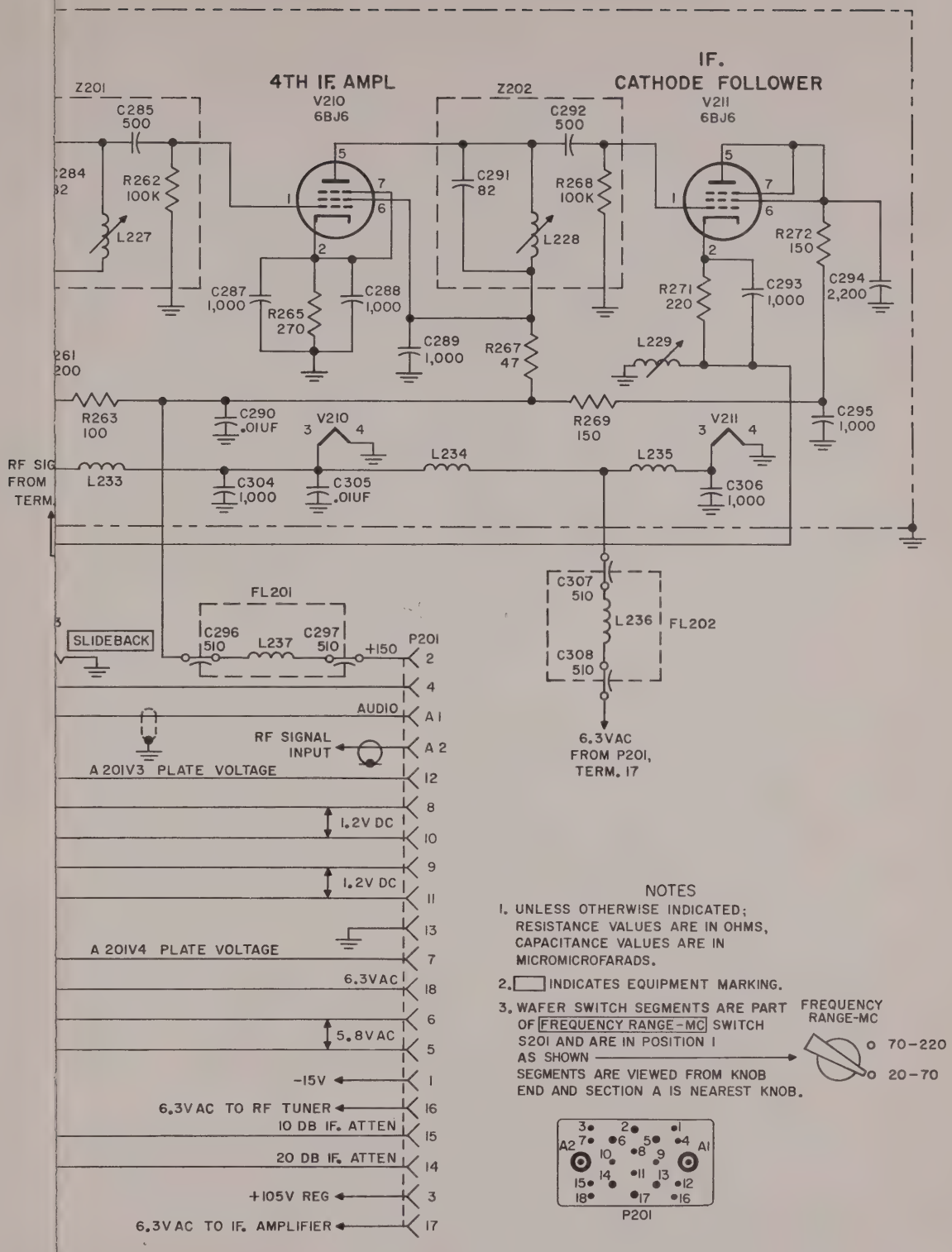

TM6625-351-35-88

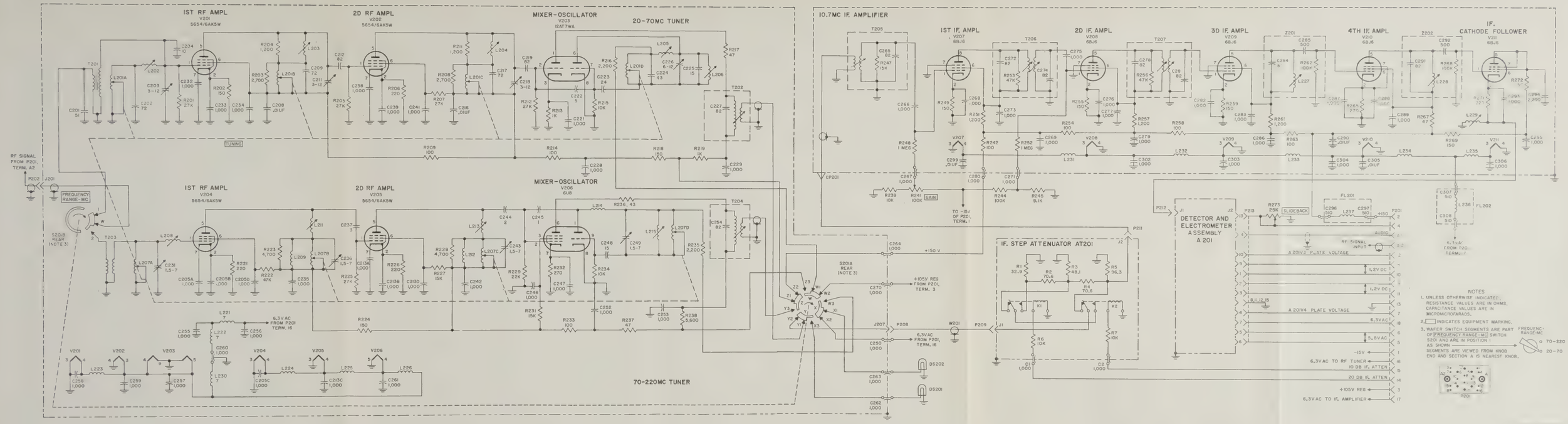

Figure 100. Tuning unit 2, schematic diagram.

TUNING UNIT 2

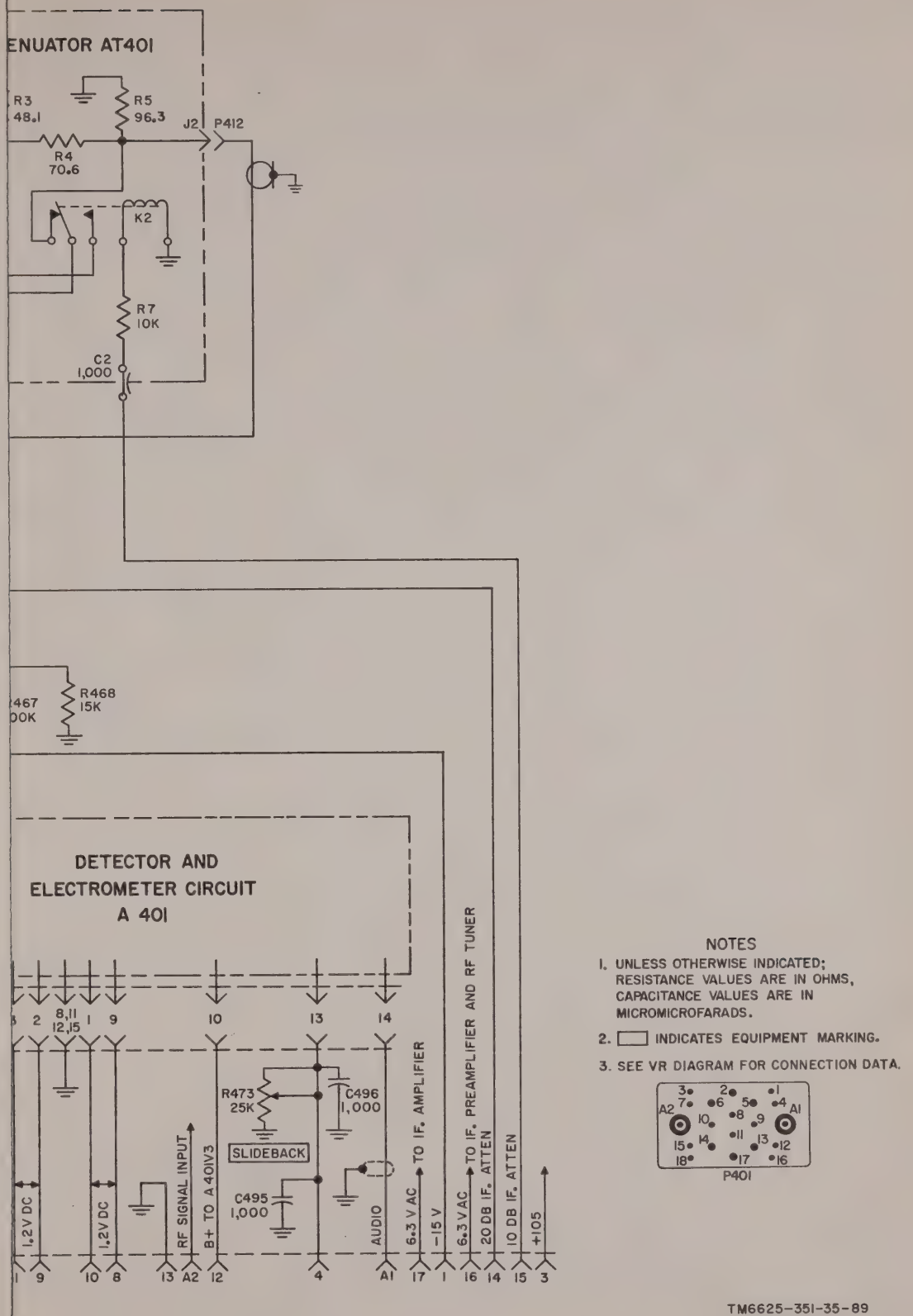

NOTES

1. UNLESS OTHERWISE INDICATED; RESISTANCE VALUES ARE IN OHMS, CAPACITANCE VALUES ARE IN MICROMICROFARADS.
2. ☐ INDICATES EQUIPMENT MARKING.
3. SEE VR DIAGRAM FOR CONNECTION DATA.

P401

TM6625-351-35-89

TUNING UNIT 3

TUNING UNIT 2

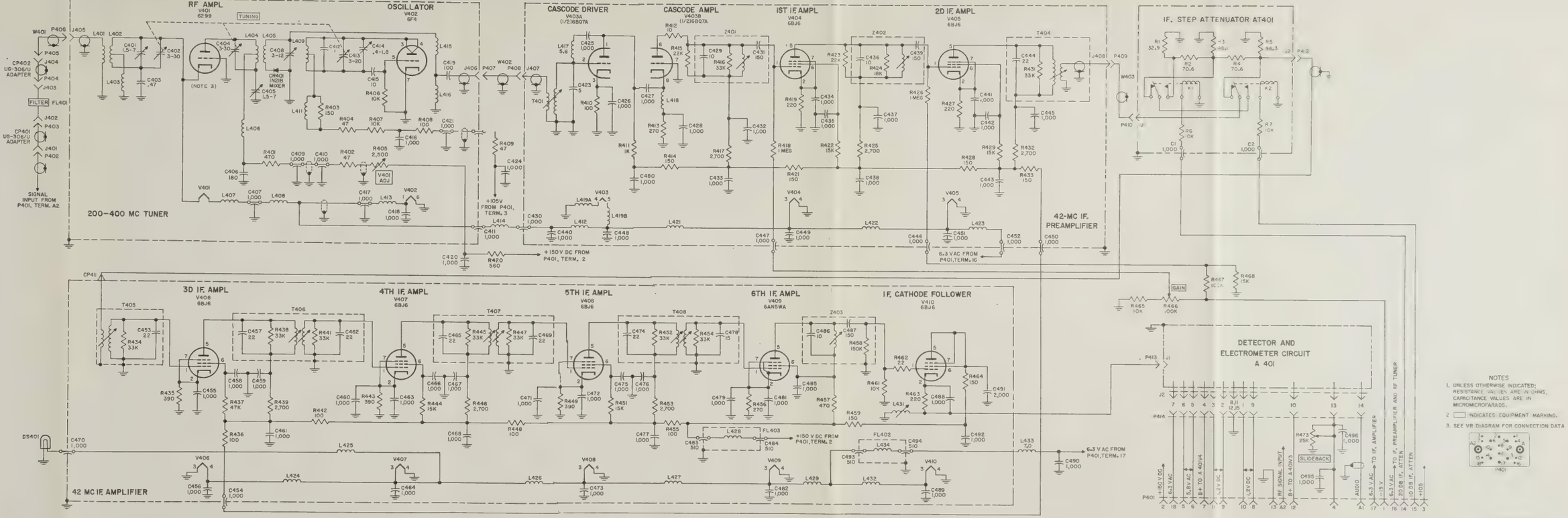

Figure 101. Tuning unit 3, schematic diagram.

Tuning unit 3

TUNING UNIT 4

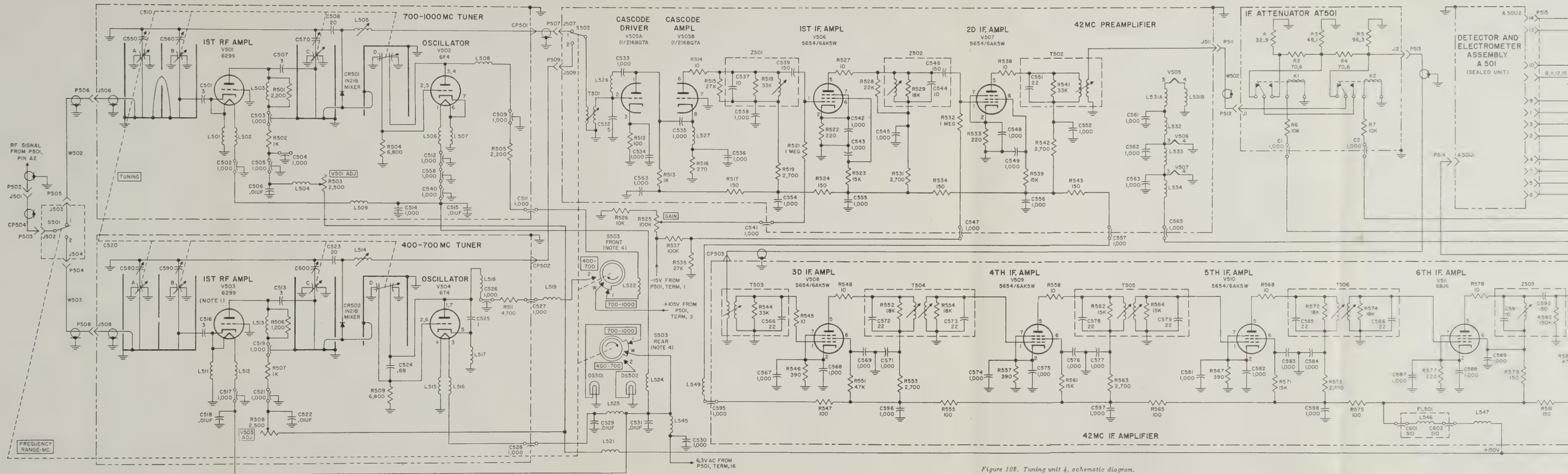

Figure 102. Tuning unit 4, schematic diagram.

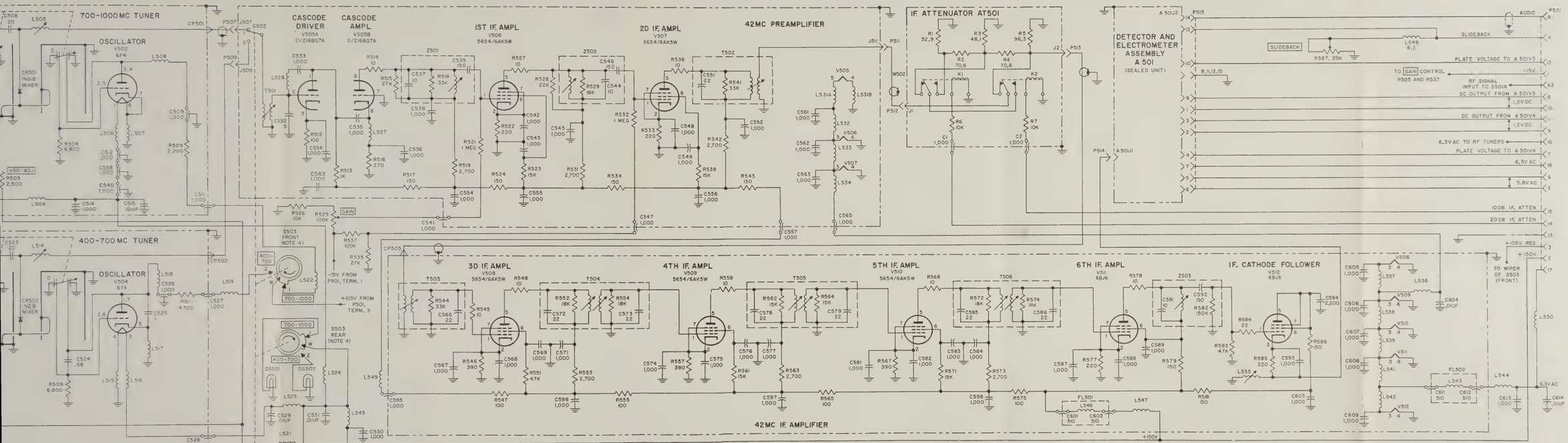

Figure 102. Tuning unit 4, schematic diagram.

1 SEE VR DIAGRAM FOR CONNECTION DATA.

2 UNLESS OTHERWISE INDICATED: RESISTANCE VALUES ARE IN OHMS, CAPACITANCE VALUES ARE IN MICROMICROFARADS.

3 ▭ INDICATES EQUIPMENT MARKING.

4 WAFER SWITCH SEGMENTS ARE PART OF [FREQUENCY RANGE-MC] SWITCH S503 AND ARE IN POSITION I AS SHOWN

TM6625-351-35-90

TUNING UNIT 4

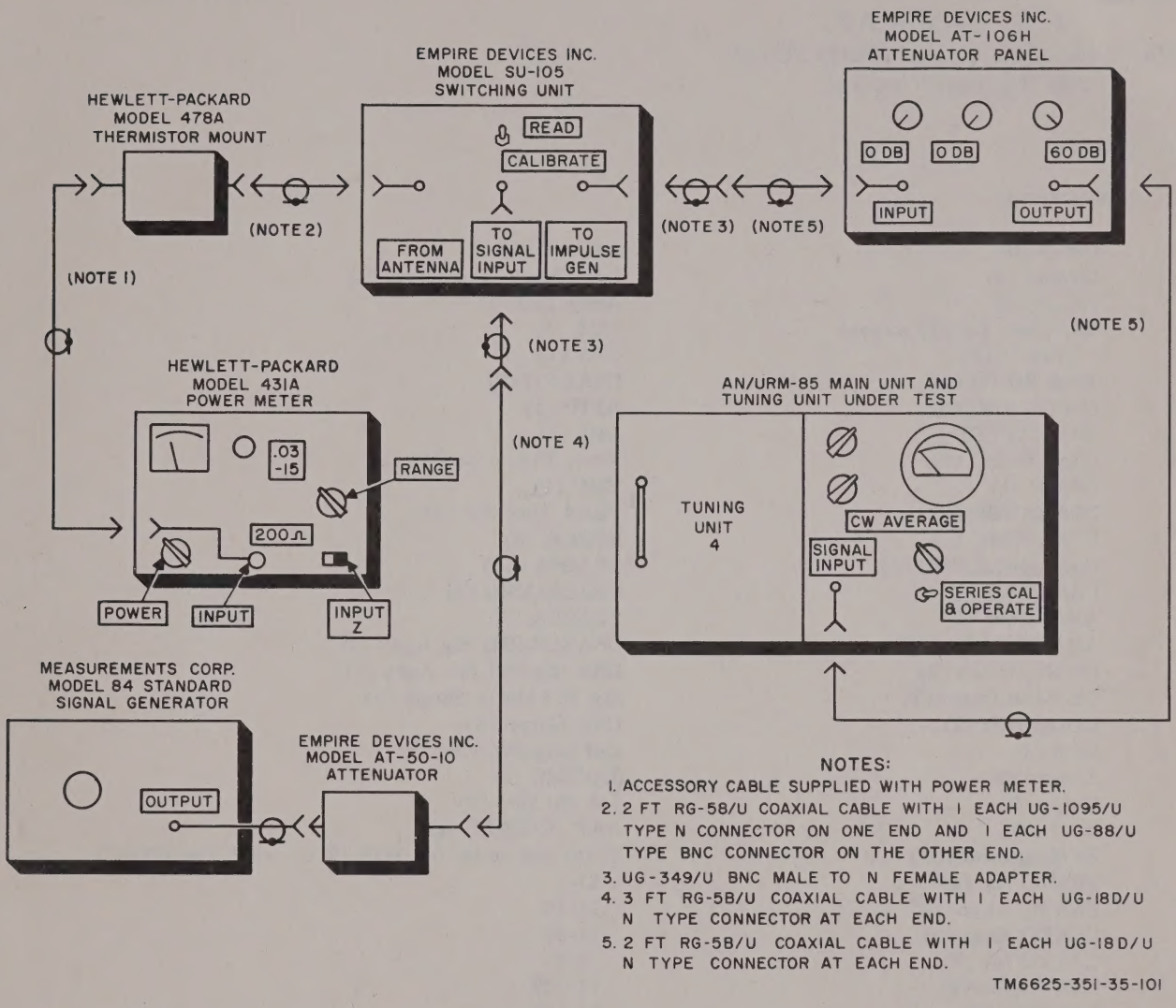

Figure 103. Test setup for calibration as two-terminal rf voltmeter.

By Order of Secretary of the Army:

G. H. DECKER,
General, United States Army,
Chief of Staff.

Official:

J. C. LAMBERT,
Major General, United States Army,
The Adjutant General.

Distribution:

Active Army:

DASA (6)
USASA (2)
CNGB (1)
Tech Stf, DA (1) except
CSigO (14)
Tech Stf Bd (1)
USCONARC (5)
USAARTYBD (1)
USAARMBD (2)
USAIB (1)
USARADBD (2)
USAAVNBD (1)
USAABELCTBD (1)
USAATBD (1)
ARADCOM (2)
ARADCOM Rgn (2)
OS Maj Comd (3)
OS Base Comd (2)
LOGCOMD (2)
MDW (1)
Armies (2)
Corps (2)
Instl (2)
Ft Monmouth (63)
USATC AD (2)
USATC Armor (2)
USATC Engr (2)
USATC Inf (2)
USATC FA (2)
USAOMC (3)
Svc Colleges (2)
Br Svc Sch (2)
GENDEP (2) except
Atlanta GENDEP (none)
Sig Sec, GENDEP (5)
Sig Dep (12)
WRAMC (1)
USA Trans Tml Comd (1)
Army Tml (1)
POE (1)
OSA (1)
USAEPG (2)
AFIP (1)
AMS (1)
Army Pictorial Cen (2)
EMC (1)
Yuma Test Sta (2)
USACA (3)
USASSA (20)
USASSAMRO (1)
USASEA (1)
USARCARIB Sig Agcy (1)
USA Sig Msl Spt Agcy (13)
Sig Fld Maint Shops (3)
USA Corps (3)
Def Log Svc Cen (1)
JBUSMC (2)
1st GM Bde (2)
AAF (CONUS) (2)
Units org under fol TOE (2 cy each UNOINDC):
11-7
11-16
11-57
11-98
11-117
11-155
11-157
11-500 (AA-AE) (4)
11-557
11-587
11-592
11-597

NG: State AG (3); Units – Same as active Army except allowance is one copy to each unit.
USAR: None.
For explanation of abbreviations used, see AR 320-50.